DONGFANG



POWER AUTOMATION CATALOG

Unlimited Potential

Product Overview

Yantai Dongfang Electronics Information Industry Group (Dongfang), Ltd. was founded in 1971 and has concentrated its efforts on the research and development of electric power system automation since 1982. Dongfang integrates R&D, manufacturing, marketing and services. It is a state-certified key Hi-Tech enterprise and is one of the most large-scale electric power system automation manufacturers in China.

Since developing the first set of microcomputer based Remote Terminal Unit in China in 1982, Dongfang has been innovating R&D in the Electric Power System Automation field and now has 8 main series and more than 300 products covering the fields of electric power generation, transmission, distribution, consumption, electric power enterprise information management, etc. The product series also covers power supply equipments, communication devices, electric railway traction electric-supply automation system, etc. Now there are more than 420 sets of dispatch center SCADA/EMS and more than 5000 sets of RTU had been provided by Dongfang to more than 2500 customers in this field.

CONTENTS



SCADA/EMS for Power System Dispatch Center 1

DF8002 Integrated Dispatch Center SCADA/EMS 7

DF8003 IEC61970 and CORBA Based SCADA/EMS 8

DF8200 Multilevel Power Automation Centers Data Interlink System 9

DF8600 Power Enterprise Information Integration Interlink Platform 10

DF7700 Power Market Technique Supporting System 11



Remote Terminal Unit (RTU) 13

DF1331 Enhanced Distributed RTU 15

DF1700 Distributed Modular RTU 17



Substation Monitoring & Control System (SCS) 19

DF3600 Object-Oriented Substation Monitoring and Control System 21



Protective relays, Automatic Devices, Digital Fault Recorder 31

DF3300 series Protective Relays, Automatic Devices, Digital Fault Recorder 31



Distribution Automation System (SCADA/DA/GIS/FTU...) 33

DF9100 Series Distribution Control Center SCADA/DMS 35

DF9200 Series Distribution Automation Substation system 35

DF9300 Series Distribution Automation Terminal units 35

DF9300 Distribution communication system 35

CONTENTS



Meter and Automatic Meter Reading and Billing System . 37

DF6100 Automatic Meter Reading and Billing System 37

DSTD178(179)/DSSD178(179) series Meters 39

Energy Data Acquisition Terminal Series 41



High Frequency Switching Power Supply 42

DF0210A Series High-frequency Switching DC Power Supply 42

DUM series Intelligent High-frequency Switching Power Supply 43

DC-DC Isolated Converter 44

Supervisory Control System for Power Equipment and Environment 45



Communication Devices 46

JSQ-31NT series Digital Dispatching Communication System 46

GSW Wireless Communication System 47

AMR-2000 Multi-channel Digital Recording System 48

Digital Video Meeting System 49

Mobile Communication Monitoring and Control System 50

Data Integration and Transmission 51

AB7000 3.5GHz Broadband Wireless Access System 52

AB9400 26GHz Broadband Wireless Access System 53



Power Enterprise Information Management System 55

DF8000 SCADA/EMS

FOR POWER DISPATCH CENTER



At present, there are more than 420 Power System Dispatch Centers including district and above level dispatch centers, county level dispatch centers and centralization control centers that use DF8000 series SCADA/EMS, and over 30% district level power dispatch centers are using DF8000 series products in China.

The DF8000 series SCADA/EMS Products include:

DF8002 Integrated Dispatch Center SCADA/EMS

DF8003 IEC61970 and CORBA Based SCADA/EMS

DF8000 Series SCADA/EMS for Power Dispatch Center

Overview

DF8000 series Electric Power Dispatch Center SCADA/EMS systems are a complete solution which realize the functions of electric power system supervisory & control and data acquisition, electric power network safety & economical operation and analysis, real-time dispatch management, dispatcher training, data communication between different centers, etc.

Dispatch Center Typical Configuration

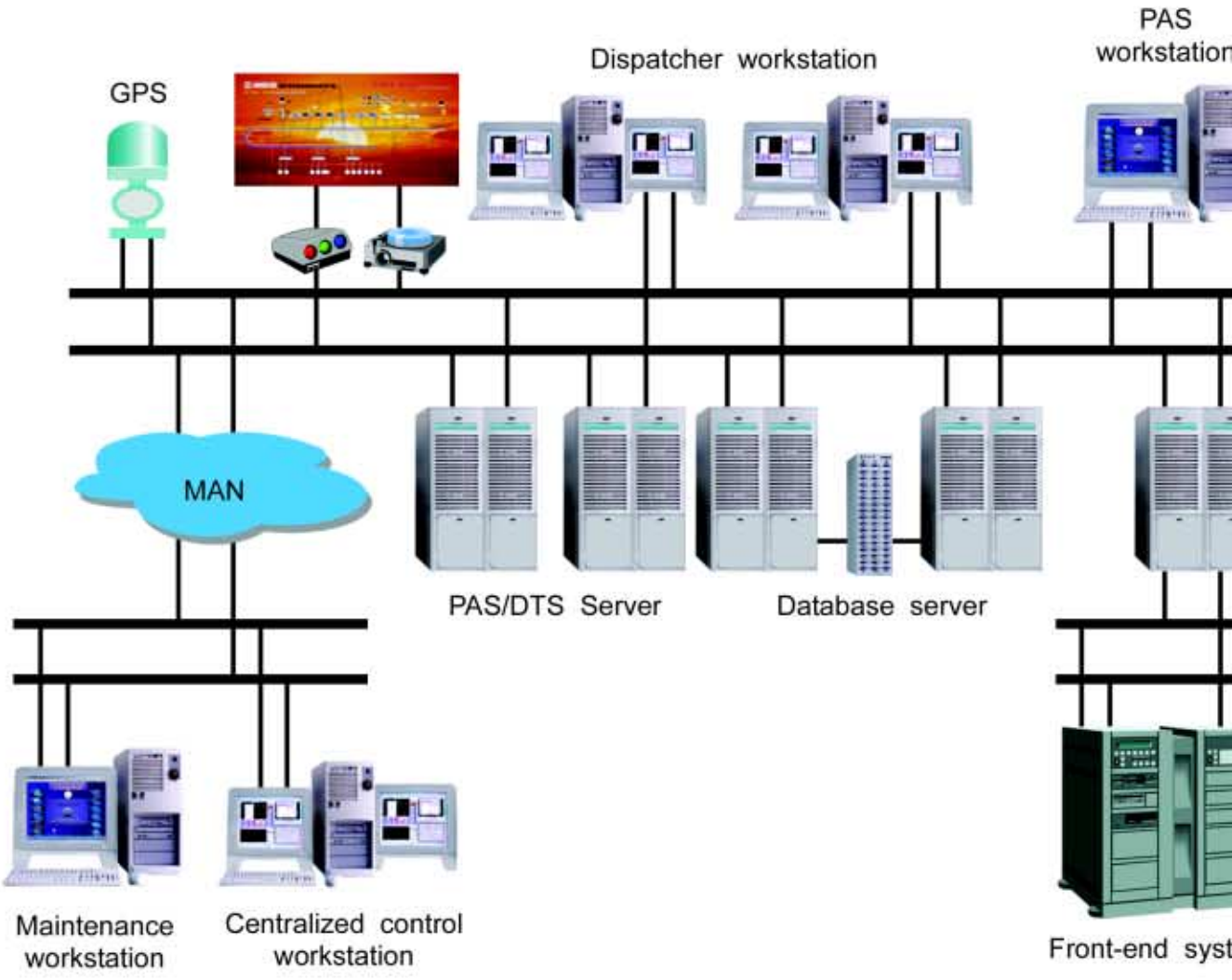



Software Copyright Certification No.0004296



New - Key- Product state certification No.200187000038

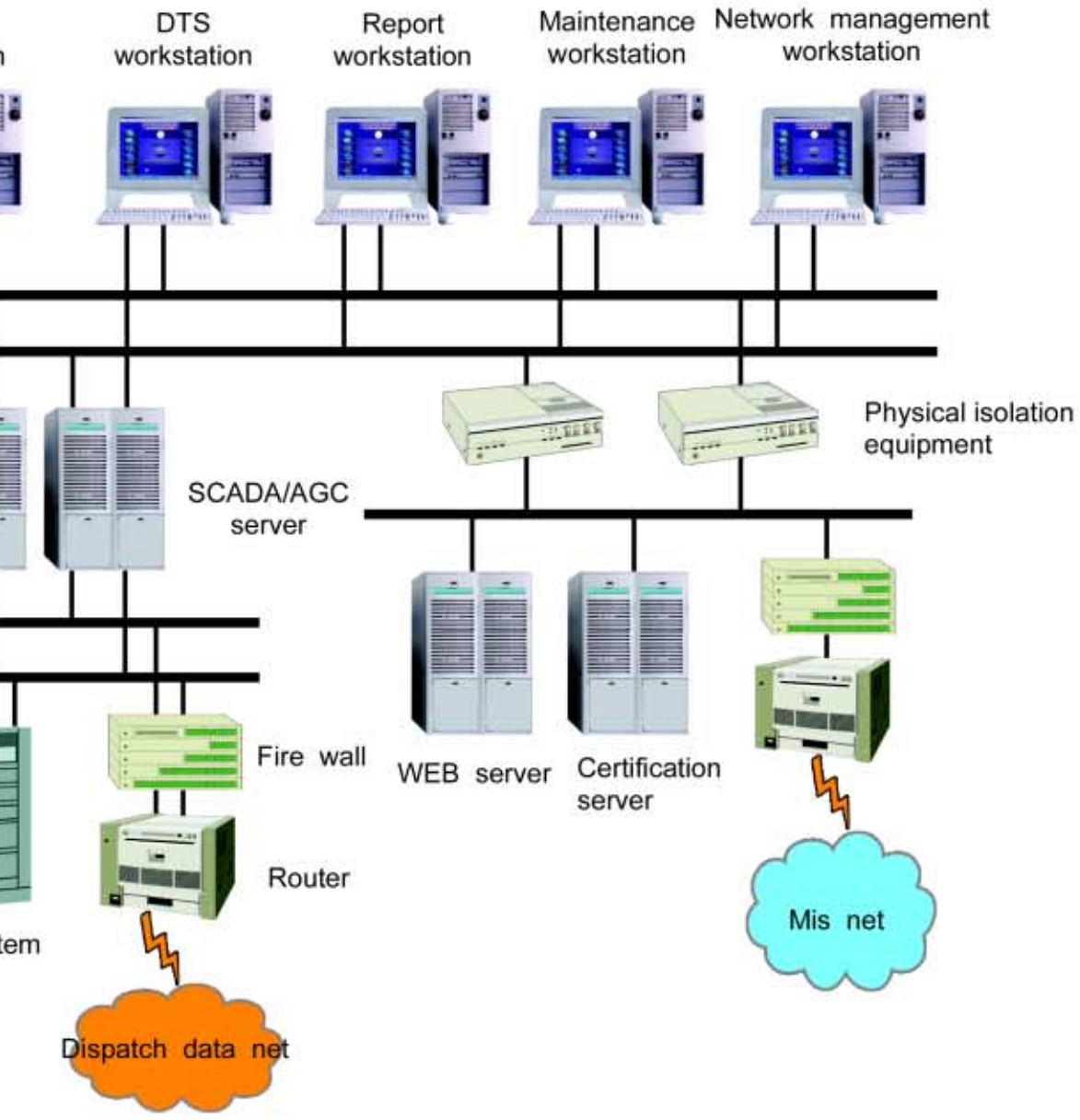

Functional Software Modules:

- Integrated Hardware/Software Platform
- SCADA System
- Power Analysis Software: Network Topology, State Estimation, Dispatch Power Flow, Network Equivalence, Short-circuit Current Calculation, Voltage Control/Reactive Power Optimization, Static Security Assessment, Load Forecasting and so on
- Dispatch Information Management System (DMIS)
- Dispatcher Training Simulation System (DTS)
- Tele-Meter Reading System(TMR)

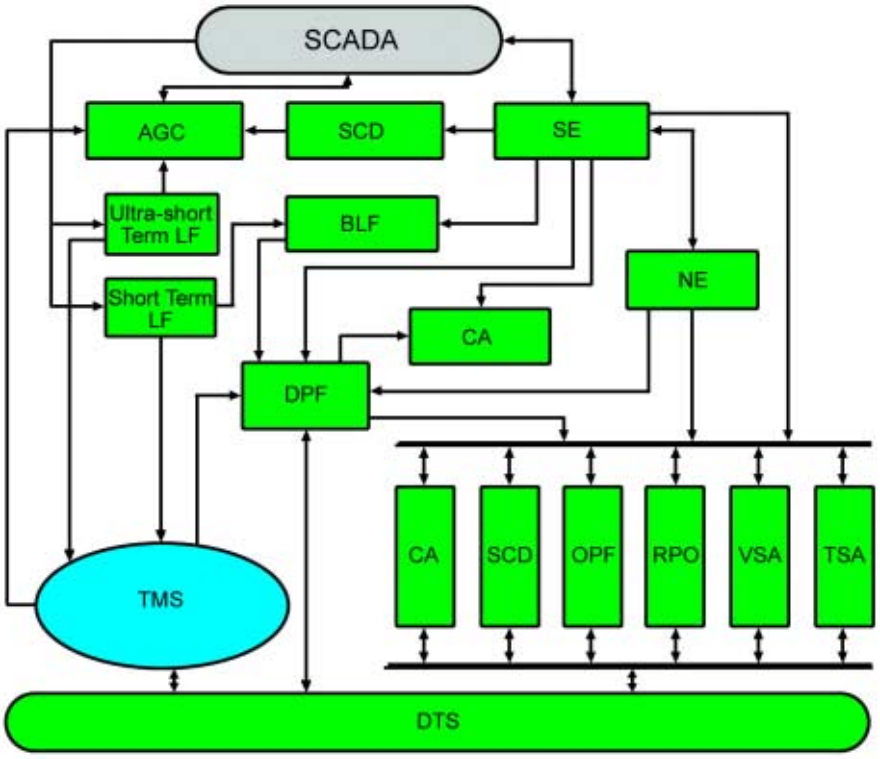

Software Modules Relationship inside DF8000

Software Architecture

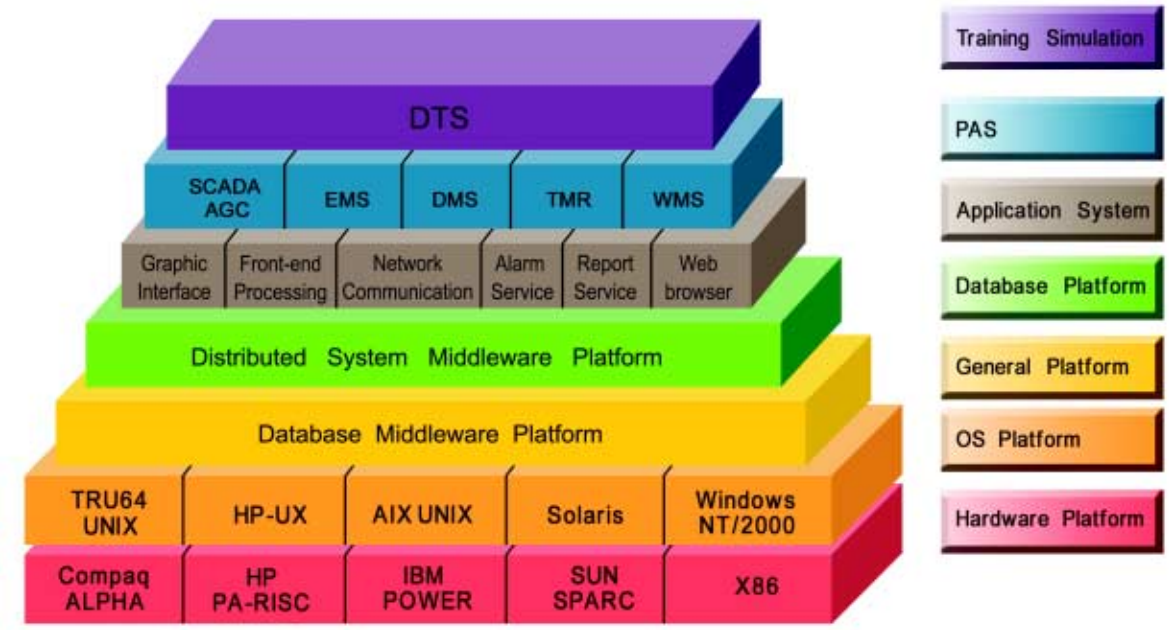

Software Architecture of DF8000 System



Features of DF8002 System

- Full scale trans-platform solution, its hardware platform could support SUN, Alpha, PC etc., and software platform could support UNIX, Windows2000/NT,etc.
- Supporting typical database such as Sybase, Oracle etc.
- The classification application and authority management of information are customized.
- Particular client level open advanced language, so the application is more flexible and diversiform.
- Real-time data, report, and event Web issue, more convenient for MIS networking.
- Integrated design idea, support uniform platform of power applications integration for SCADA, EMS, DTS, DMS, TMR etc.
- Generalized soft bus based distributed operating environment management.
- Graphics-module-database integrated application mode.
- Resource optimized real-time database Client/Server management system.
- General computer data communication system.
- Electric-grid applied software with accurate models, advanced algorithms, and reliable functions, including network modeling/network topology, state estimation, dispatch flow, short-term load forecasting, static security analysis, reactive power optimization, short-circuit current calculation, optimal power flow, external network equivalent, close-loop flow & protective relay setting checking, etc.
- Advanced applicable dispatcher training simulation system.
- "Real-time Dispatcher Management System" improves dispatcher management automation level.
- "Intelligent Operating Ticket System" replaces ticketing by hand, improves the efficiency and correctness of ticketing.

Typical Projects of DF8002

More than 90 regional level load dispatch centers and over 300 county level dispatch centers have chosen DF8002 system.

- National Electric Power Dispatch Center, Democratic People's Republic of Korea;
- Shanghai Power Dispatch Center;
- Shanghai City East Power Dispatch Center;
- Hangzhou Power Dispatch Center;
- Kunming Power Dispatch Center;
- Shaoxing Power Dispatch Center;
- Lanzhou Power Dispatch Center;
- Tibet Power Dispatch Center.





Features of DF8003 System

- Hierachical Components and Open Technique
  DF8000 system adopts layered components software structure which insulates upper application layer from bottom platform layer, provides uniformly virtual extensible and distributed support platform for all kinds of application, and supports SCADA, EMS, DMS, TMR incorporated integration. So we realize open architecture from hardware to the operating system, then to the platform layer, and at last to the application layer.

- Conform to IEC 61970 International Standard
  Design and development is according to IEC 61970 international standard, CIM (Common Information Model), CIS (Component Interface Standard). The system provides "Plug and Play" ability for the integration of different EMS systems, so it can save costs by making the best of the existing system and increasing system expandability.

- Based on the Middleware Architecture
  The DF8000 system adopts middleware technique according to CORBA standard. The middleware technique solves the problem from system heterogeneity, and provides transparency access to network nodes and independency of development language.

- Advanced and Reliable Design Principle
  The DF8000 system adopts the advanced "N+1" redundancy mechanism to achieve the high reliability and ensure the survival of the main application under extreme conditions.

- Front-end processing with cluster technique
  The design of the Front-end process uses the cluster technique, which realizes the parallel acquisition process and channel data dynamic exchange, and eliminates bottleneck of the traditional channel process style.

- Integration Technique of the Drawing and Data Models
  The connection relationship is established when drawing the power network architecture.

- Intuitionistic and Convenient Man-Machine-Interface (MMI)
  The DF8000 system adopts the technique of visual user interface customization to satisfy three-dimension graph display and individual control. It can be switched between real time supervisory state and research analysis state, and between various applications.

Typical Projects of DF8003

- Luoyang Power Dispatch Center;
- Wuhan Power Dispatch Center;
- Foshan Power Dispatch Center;

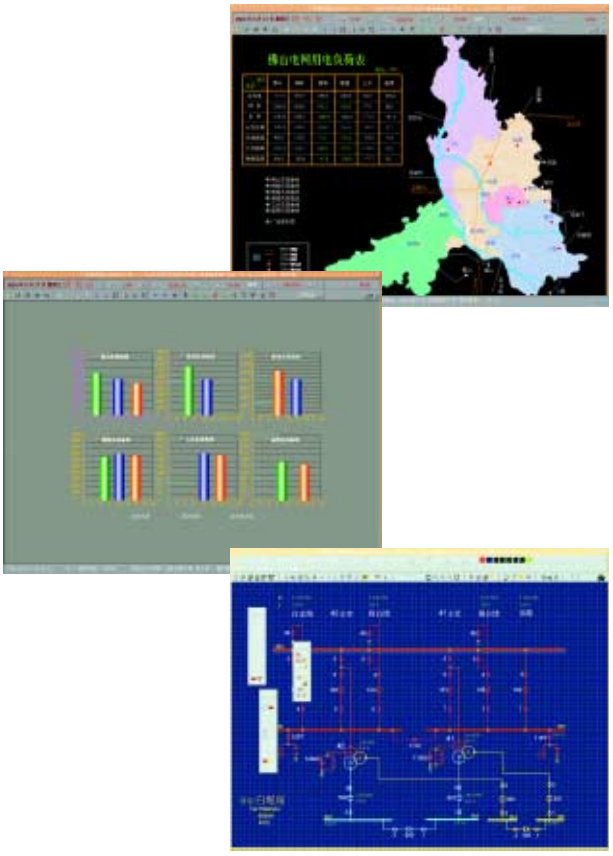

DF8200 Multilevel Power Automation Centers Data Interlink System

With the increasing of information sharing and integration requirement in the implementation of Power Market, the super motor for transferring power message---DF8200 Power Data Interlink System will realize the single and bilateral flow of power data on each node of power data network according to your requirement.

Excellent values of DF8200 Power Data Interlink System for customers

- One DF8200 message-transferring motor could make this message source radialized, each message link could arbitrarily organize the message contents received and sent, to establish real power data network.
- The system could realize message double-end and single-end transmission, organize power data in network TCP/IP layer according to different power protocol (IEC870-5-101, DL476-92, TASE2 etc.), to meet the requirements of different customers. At the same time, standard data acquisition API interface is provided, for the quick data acquisition of receiver.
- The single-channel double-link transmission of power real-time data and history data is realized, to provide the efficiency of message transmission.
- Intuitionistic interface for link parameter configuration and message content customization is provided and plenty of interface monitor data reports, monitor network flux are also provided, to make the message flow in control.

Typical Projects of DF8200

Shanghai Power Company Multi-level control Centers Data Network Poject
Shaoxing Power Company Multi-level Control Centers Data Network Project

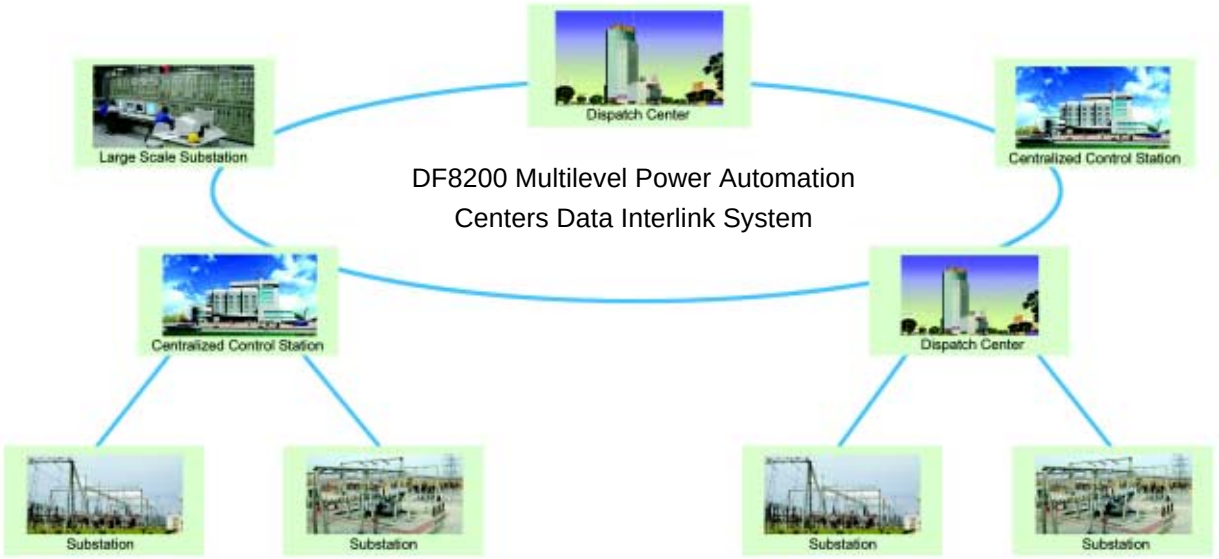

DF8600 Power Enterprise Information Integration Interlink Platform

The DF8600 system provides general platform, integrates the Energy Management System, Distribution Management System, Electric-energy Metering System, Power Market Technique Support System, Hydraulic Dispatch and S&C Automation System and Management Information System, and solves the "Automation Island" phenomenon relatively isolated in enterprise information. So, the phenomena, such as low efficiency, information redundancy and resource waste could be avoided.

Technical Features

Provide Non-Real Time Server-Server Data Integration Method

The XML gather/derive function module provides the system cut in nonstandard and non-middleware platform online & offline, and provides server-server data integration.

- Use XML/RDF protocol description data, and irrelated with the factors such as hardware platform, operating system etc.;
- Be able to realize quick and efficient transfer XML report by manifold communication protocols;
- Be able to decrease the effect to original system;
- Provide INTERNET oriented data exchange.

Provide "Near Real-time" Data integration Method

The CORBA based client/server provides the system cut in standard and CORBA middleware platform online, and provides flexible data exchange.

- Use CDA (common data facilities) defined by IEC 61970 CIS, and provide standard access interface;
- Provide CIM model based data mode file with good generality;
- Provide Push and Pull two access modes.

These two parts complement each other, and meet the requirements of customers under different conditions. A customer could select suitable integrating method according to the actual condition of enterprise automation system.

Typical Projects of DF8600

- Anyang Power Enterprise Information Interlink;
- Huangzhou Power Enterprise Information Interlink;
- Jiujiang Power Enterprise Information Interlink.

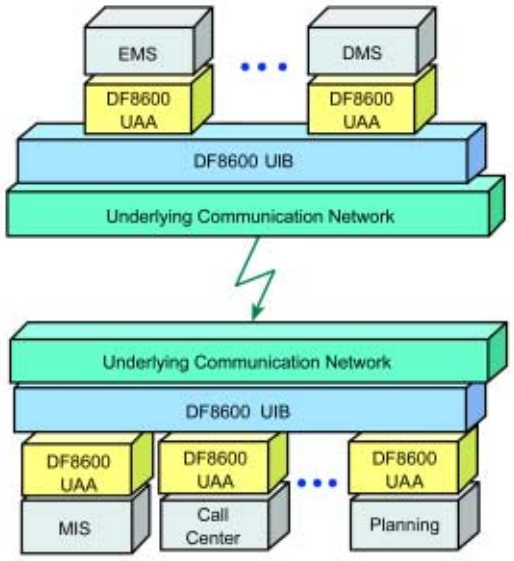

Application Architecture of DF8600 Interlink Platform

DF7700 Power Market Technique Supporting System

Power Market Trade Management System

Features:

- Bidding (Power Generation Plan, Assistant Service Plan, Transmission Service Plan) and security integrated design;
- High-efficient perfect trade management algorithm and close-loop security verification;
- Intuitionistic visualized security trade software package;
- Optimal objects to be selected;
- Enhanced network security management and data filtering ability;
- Supporting the establishment of multifarious markets, include:
  AGC reserve market;
  10 minutes rotating reserve market;
  30 minutes operating reserve market;
  Capacity Reserve Market.

Power Market Information Support System

Main Functions:

- The authorization and authentication of market members;
- Market data declaration;
- Issue and inquiry of market information.

Features:

- High reliability of system;
- The ability of enhanced network security management and data filtering;
- High retractility;
- The real-time status management of server.

Power Market Simulation Training System

Uses:

- The training of trade center operators;
- The ratiocination of power generation quotation;
- The tools of market supervisory;
- The test, check and accept any of applied software;
- The research of electric-grid development layout;
- Being a lawcourt evidence, to provide the replay of the disputed transaction or operating method.



DF1000 Series Distributed RTU

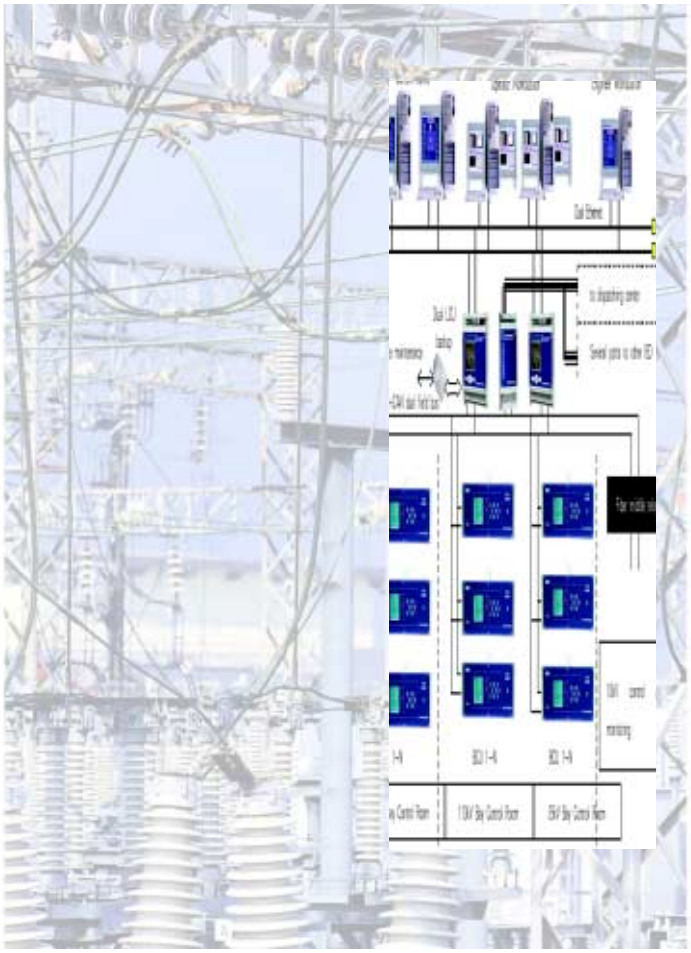



Since the first set of RTU developed in 1982 by DongFang Corporation, there are more than 5000 sets of DF1000 series RTU running satifactorily in P.R. China as well as some other countries.More than 3000 power plants and Substations had selected DF1331RTU which has the biggest market share in China.

DF1000 series RTU production mainly includes:

DF1331 Enhanced Distributed RTU

DF1700 Distributed Modular RTU

DF1331 Enhanced Distributed RTU

Features of DF1331

- PC104 embedded module is adopted as the CPU of main communication processor board/unit with high stability and easy scalability . Dual main communication processor boards/units hot standby are supported.
- All functional boards has its own CPU, which communicate via a high field bus, FDK-bus, It is easy for expanding distributed modules within 1200 meters.
- Complete electric isolation techniques are adopted between plug-in boards, between plug-in boards and spot electric devices. All boards can be plugged in or out with the whole system power on.
- By adopting the user-oriented open structure, user can arbitrarily combine and extend the function modules or plug-in boards without modifying any EPROM. It is easy to rebuild the system by using maintenance software to change relevant configuration parameter on line in portable computers. Parameters are saved in hard disc of MCB/MCU and EEPROM of I/O units. System parameters are dual backup and are non-volatile.
- It can be remotely maintained via common telephone nets or Ethernet.
- Supporting communications with optic fiber.
- Default configuration with 10 serial ports (RS232/RS422/RS485) to meets the need of integrated automation in power plant or substation. Providing interface to Ethernet/LAN£¬TCP/IP£©
- Abundant communication protocol library available, which includes IEC870-5-101, 102, 103, 104, CDT85, POLLING, IEC1107, MB88, SCI1801, N4F, FDK etc. It also contains protocols of different kinds of relays and intelligent energy meters. These protocols can be modified according to user's needs.
- Providing AI sampling mode with transducers (DCAI). And sampling mode without transducers (ACAI) is also supported. In ACAI mode, all electric parameter transducers and corresponding wiring cable can be saved.
- PSOS embedded real time Operation System of DF1331 system adopted.
- By high-speed AC sampling function, harmonic analysis can be realized.
- Dual power supply standby, 220/110/48VDC and 220/110VAC can worked as standby power supply inputs.

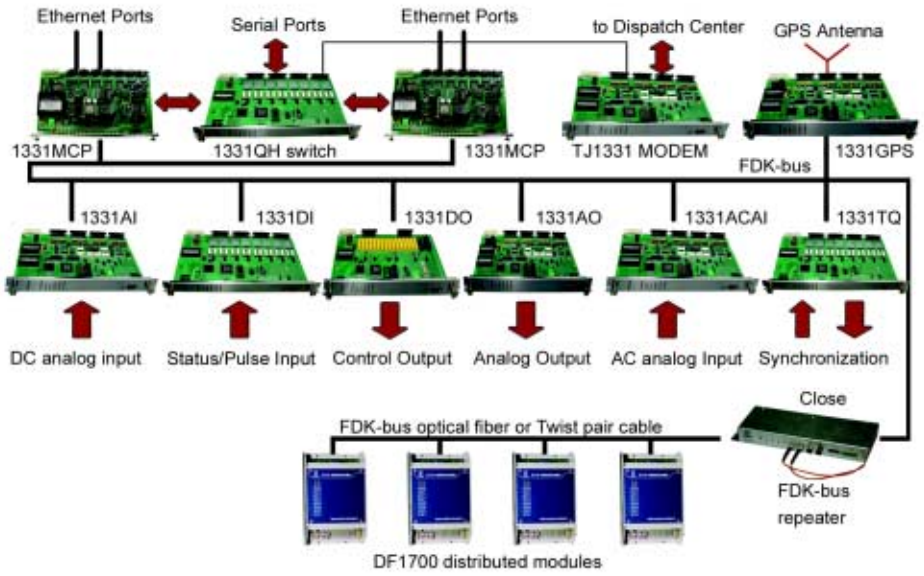

Main Functional Units and Boards of DF1331:

Type	Brief Function Description
DF1331MCU	Main communication processing unit, 19" 2U, with LCD and keyboard, 10 serial RS232/485/422 and 2 Ethernet ports, 2 FDK-bus interface
1331MCB	Data processing and communication center of the system, with 2 FDK-bus network interfaces for managing all other functional boards, 10 serial ports for communication with dispatch centers or intelligent devices
1331MD	For installation of 1～3 channels 1331TJ MODEM, which are used for modulation of digital channels to analog channels
1331DI	64 channels of state or pulse signal sampling, SOE 1～2 ms, input signal voltage 24VDC/48VDC/110VDC/220VDC
1331DO	16 channel trip/close control output
1331DCAI	64 DC voltage signals or 32 DC current signals sampling, sampling range: 0～10V, 0～5V, 0～20mA, 0～1mA, 0～100mA, 4～20mA
1331ACAI	40 direct input AC signal sample channels, for 8 circuits full electrical parameters in 3 meters modes or 12 circuits full electrical parameters in 2 meters mode when working in common VT mode
1331AO	4-channel analog signal outputs and 2 BCD codes channel outputs
1331GPS	Providing standard time signal from the GPS receiver to the DF1331 system
1331HUB	FDK-bus Optical Fiber Repeater, 4 Optical fiber ports, 2 twist pair wire ports
1331LPT	Communication Channel Lightning Protector
1331PLPT	Power Supply Lightning Protector

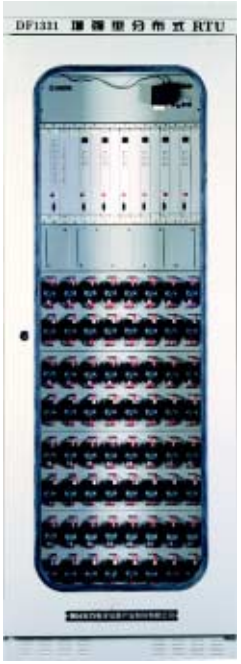



Computer Software Copyright Register Certification



Science and Technology Progress First Grade Award by State Information Industry Ministry of China in 1999

DF1700 Distributed Modular RTU

DF1700 adopts modular and distributed system architecture. Every module has its own CPU and communicates via FDK-bus and CAN dual field buses. It also supports Ethernet and full IP solution as the monitoring and control communication bus in Bay level. The system may be fixed with separate modes, and the configuration of the input or output module is flexible.

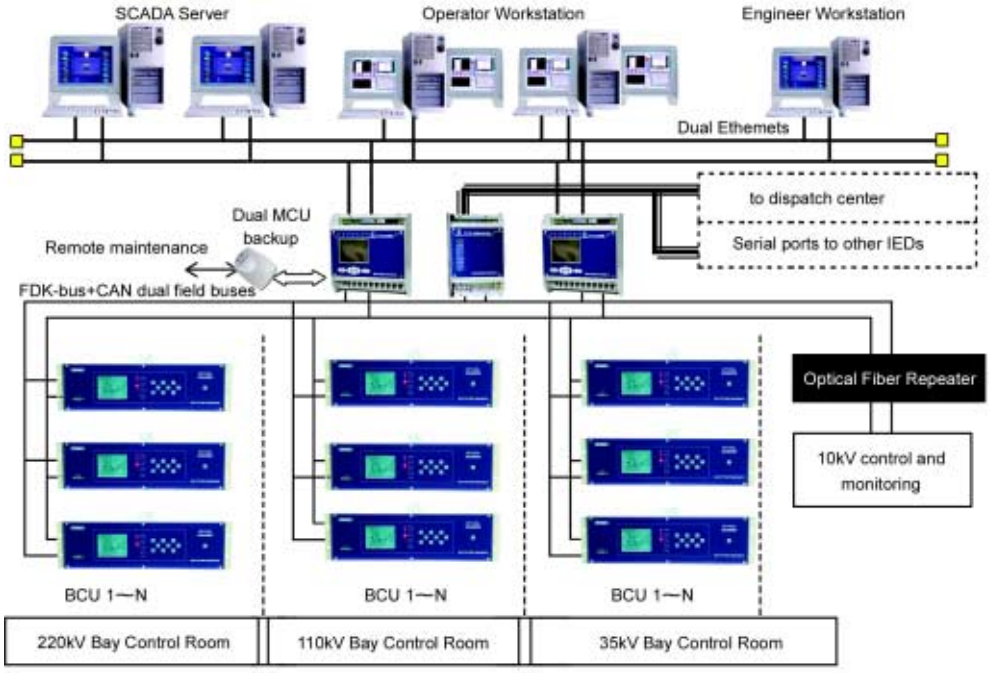

Main Functional Units of DF1700 RTU:

Type	Function brief description
DF1710/DF1710A	Main communication processing unit, with LCD and keyboard, 10 serial RS232/485/422 and 2 Ethernet ports, 2 FDK-bus interface
DF1740MODEM	4 MODEM channels
DF1725IED	LCD Keyboards, 32/64DI, 12AI, 18DO, 4AO, FDK-bus and CAN dual field bus ports, 4 serial ports, 2 Ethernet ports, 19" 3U
DF1721IED	LCD Keyboards, 16DI, 8AI, 7DO, FDK-bus and CAN dual field bus ports, 2 serial ports, 19" 1/2, 2U
DF1750	64DC single terminal inputs or 32 dual terminal inputs, FDK-bus and CAN dual field bus ports, 1 serial port
DF1751	64 DI, FDK-bus and CAN dual field bus ports, 1 serial port
DF1752	32 point DOs, FDK-bus and CAN dual field bus ports, 1 serial port
DF1753	40 direct input AC signal sampling channel, FDK-bus and CAN dual field bus ports, 1 serial port
DF1760	Circuit Breaker Synchronism Close control, FDK-bus and CAN dual field bus ports, 1 serial port
DF1761	4 Analog outputs, FDK-bus and CAN dual field bus ports, 1 serial port

Features of DF1700:

- Main Communication Processor Unit adopts PC104 high performance module.
- System software is based on the real time multitask operating system PSOS which has been authenticated by FAA and FDA .
- Two different field buses, FDK-bus and CAN-bus are adopted in the system, which yields highly, real time precision with the FDK-bus and rapidly response with the CAN bus.
- System supports internet protocols X.25, PPP, SLIP, IP, ICMP, IGMP, ARP, RARP, TCP, UDP, FTP, TELNET ,HTTP, SNMP, OSPF, etc.
- System has perfect module functions, and can accomplish common DI DO AI AO functions. Besides, it has automatic functions such as: circuit breaker synchronization close control, automatic control of voltage and reactive power, automatic throw-in of the backup power supply, etc. The system can integrate with different computer protective relays and IED into substation integrated automation system.
- The system can adopt the traditional Function-oriented mode as well as the Bay-oriented mode, where one I/O module accomplishes collection and control of one electric primary bay. In this way the system management and maintenance are simple and clear. The I/O modules have all the functions of measurement, monitoring,line synchronism close control, interlock error check, VQC, communication and protection management.



DF1700 Cubicle



DF1710MCU



DF1752DO



DF1725IED



DF1721IED

DF3000 Substation Automation System



At present ,there are more than 2000 substations from 35kV to 220kV which are using DF3000 series Substation Automation System.

The DF3000 series Substation Automation Products mainly includes:

DF3600 Object-oriented HV Substation Monitoring and Control System.

DF3300 Series Protective Relays, Automatic Devices and Digital Fault Recorder.

DF3600 Object-Oriented HV Substation Monitoring and Control System

System Overview

The DF3600 Object-Oriented HV Substation Monitoring and Control System is an advanced object-oriented, hierarchical and distributed substation monitoring and control system for various voltage levels from 35kV to 500kV. The system adopts the hierarchical and distributed architecture and can be divided into two levels: station level and bay level .The local monitoring and control system, network equipments, etc. are included in the station level network equipments, generally consisting of communication processing device DF3610 and communication switch device DF3611. The series of monitoring and control units DF3670～3679 are in the bay level. Bay level devices employ the bay oriented configuration as well as the configuration according to the functions. Bay units are individual, and do not interfere with each other to improve the flexibility and reliability of the whole system.

This network system employs a two-level hierarchical and distributed network: station level communication network and bay level communication network. This network structure meets the requirements of IEC61850. The station-level communication network employs dual-Ethernet whose communication rate may be either 10Mbps or 100Mbps. The bay level communication network can be connected via two kinds of field bus, FDKBUS and CANBUS, or can be directly connected via Ethernet to ensure the real-time ability and reliability.

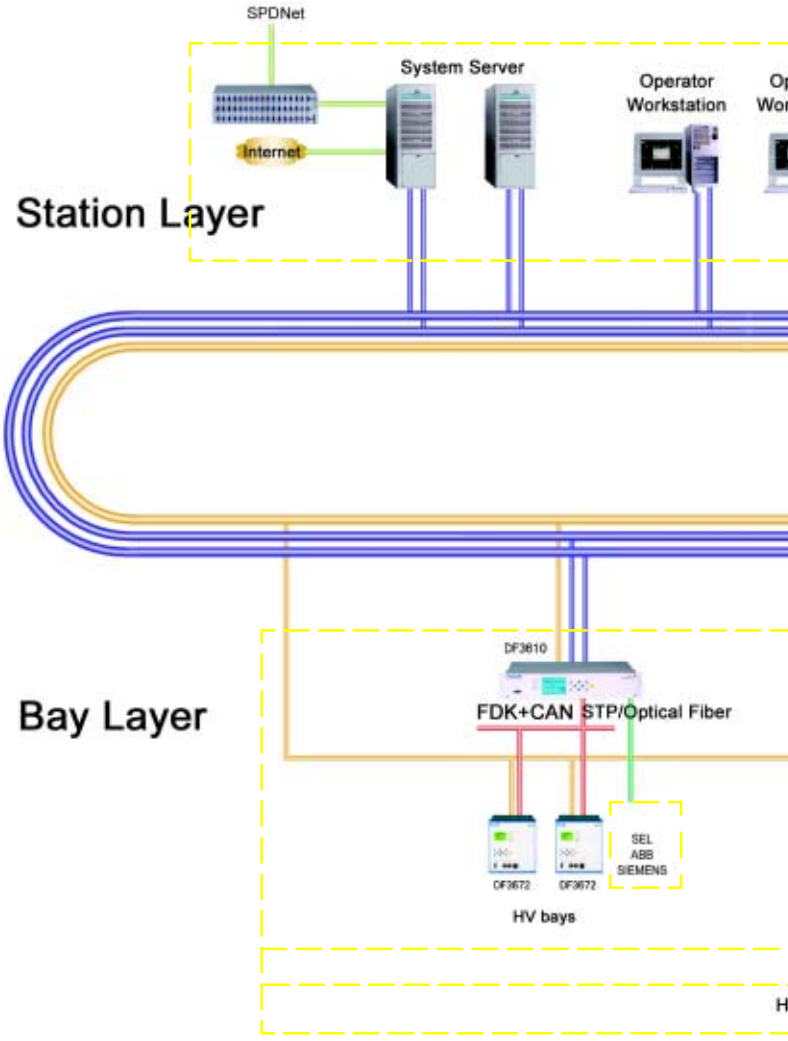

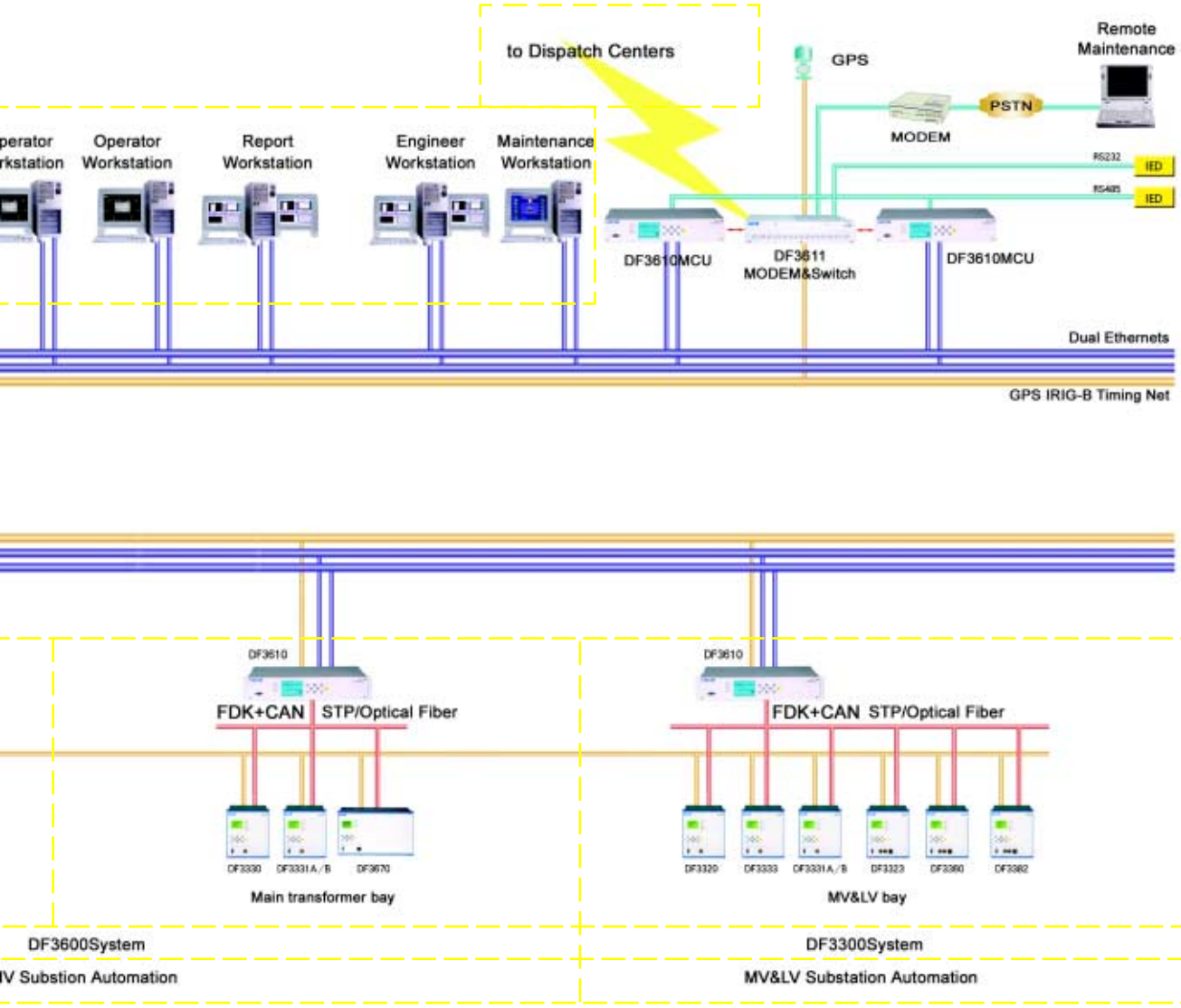
to Dispatch Centers
GPS
Remote Maintenance
PSTN
MODEM
RS232
IED
RS485
IED
perator Workstation
Operator Workstation
Report Workstation
Engineer Workstation
Maintenance Workstation
DF3610MCU
DF3611 MODEM&Switch
DF3610MCU
Dual Ethernets
GPS IRIG-B Timing Net

DF3610
FDK+CAN
STP/Optical Fiber
DF3330
DF3331A/B
DF3670
Main transformer bay
DF3610
FDK+CAN
STP/Optical Fiber
DF3320
DF3333
DF3331A/B
DF3323
DF3360
DF3362
MV&LV bay
DF3600System
IV Substion Automation
DF3300System
MV&LV Substation Automation

Features

- Bay oriented design;
- Advanced system structure;
- Flexible network configurations and communication modes;
- Unique FDKBUS fiber optics dual-loop network with self-recovery ability;
- Bay-level monitoring and control devices can be connected directly to Ethernet;
- Particularly long cipher-lock and negative voltage technology insure that remote-control will not maloperates under seriously worst condition;
- Perfect GPS time synchronization function;
- To support dual-Ethernet to connect with the state power data net by TCP/IP protocol;
- To support WEB browse search and E-mail running log;
- Particular field bus, dual-net distributary;
- Higher harmonic analysis, automatic quasi-synchronization, fault record and other functions can be implemented due to the application of DSP;
- Perfect redundant dual-processor hot standby improves the reliability of the system;
- Abundant communication protocol library makes it easy to connect with various intelligent electronic devices (IEDs);
- Comprehensive remote maintenance function;
- Capability of anti-electromagnetic interference, passing the strictest demands, IV level of the international standard IEC61000-4 concerning electromagnetic compatibility, parts of indexes exceeding IV level standard.









Configuration and Communication Mode

Unique Field-bus Dual-network Distributary

The DF3600 system employs two different types of the field-bus network, FDKBUS and CANBUS, and fully takes their advantages of the high-speed synchronous communication of FDKBUS and quick response to abnormal data of CANBUS. In the system design, the unique communication mechanism of dual-network distributary and fault switch are adopted. In the case of normal operation of these two networks, they operate in parallel according to the system tasks to implement the dynamical information flow control. Thus, the system bandwidth is utilized to the maximal extent. When one of the two networks is out of work, the tasks of the faulted network will be shifted to the normal network to ensure the integrality and to improve the system reliability.

The architecture of DF3600 system based on FDKBUS and CANBUS twisted-pair is shown as follows:

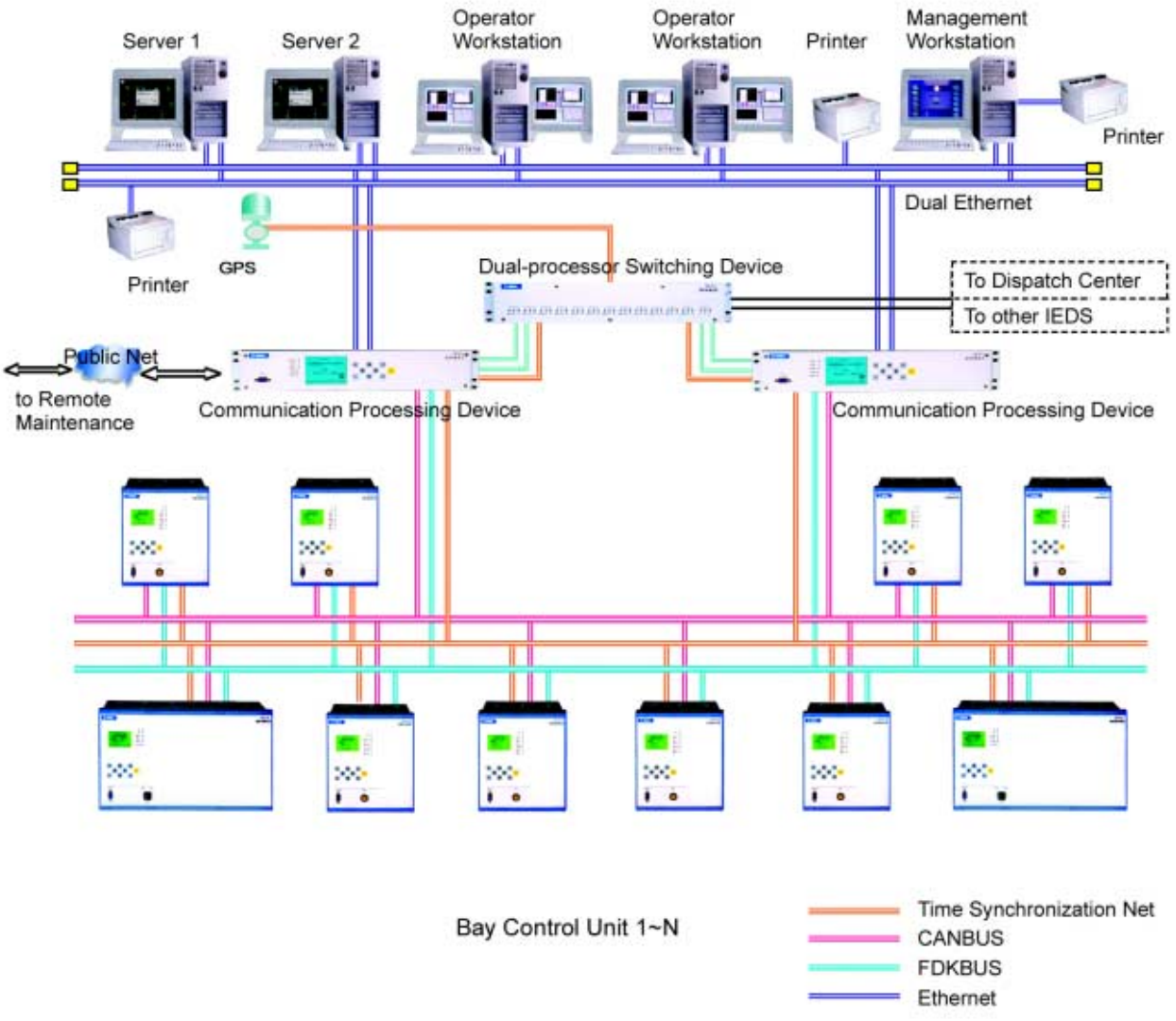

Support Bay-level Measure and Control Devices directly connected with Ethernet

All of the measure and control devices in DF3600 system may be configured with the Ethernet communication function. The open TCP/IP protocol is adopted and the communication rate is 10Mbps which meets the requirements of data communication rate and reliability. At the same time, the system has the capability of expansibility. The communication media may be twisted-pair or fiber optics. The communication mode of Ethernet is consistent with the requirements of new international standard IEC61850 for substation automation.

The architecture of DF3600 system based on Ethernet is shown as follows:

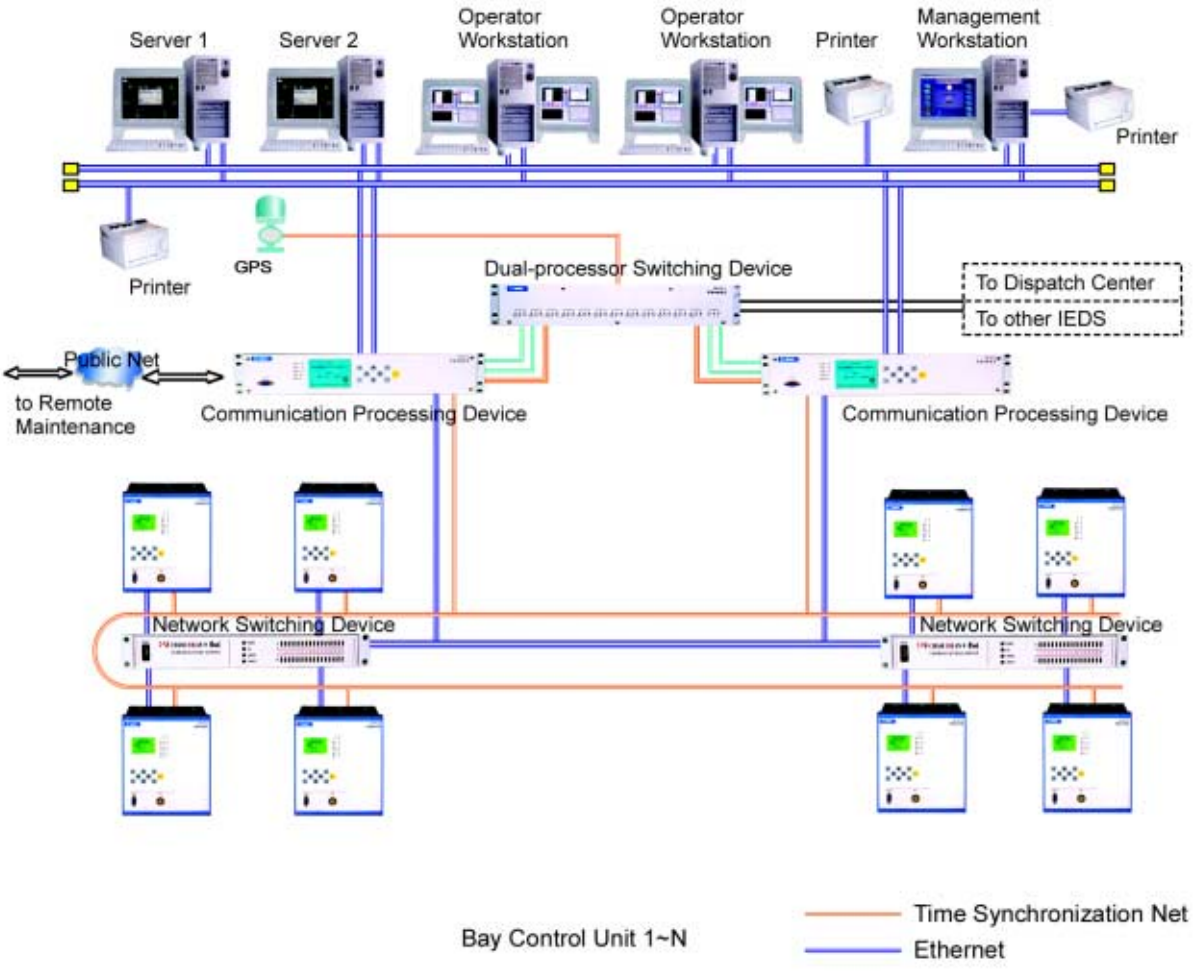

Fiber Optics Self-recover Dual-loop Network

FDK-bus supports such configuration mode as fiber optics self-recover dual-loop network with Time Division Multiplexing technology and greatly improves the communication reliability.

The architecture of DF3600 system based on fiber optics dual-loop network is shown as follows:

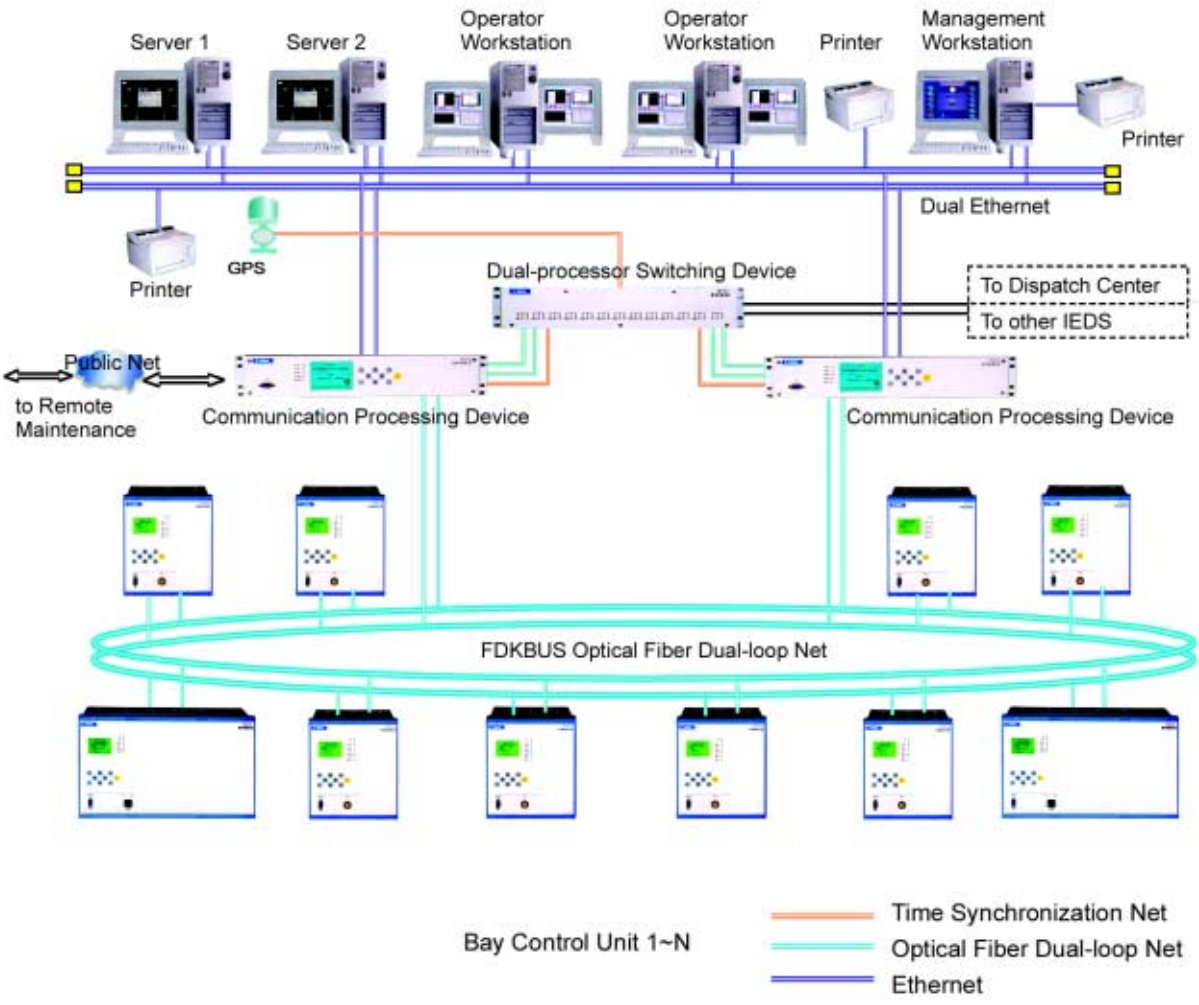

As well-known, the electromagnetism in the substation is very strong. To improve the communication reliability, based on the successful application of FDKBUS, DF3600 system develops the fiber optics dual-loop network technology with the ability to self-recover. The application of dual-loop network ensures the communication real time. And the configuration of dual-loop network make the system automatically self-recover under the condition of fault and the communication reliability is guaranteed. The network has the ability of anti-electromagnetic interference due to the use of fiber optics. Fiber optics dual-loop time division multiplexing time synchronization is adopted, that is, while normal real-time data transferring, IRIG-B time code is also used. Thus, some cables for time synchronization are saved, and the system reliability and time synchronization precision are greatly improved.

DF3600 Bay Level Series Product List

Type	Brief Function Description
DF3610MCU	Main communication processing unit, with LCD and keyboard, 10 serial RS232/485/422 and 2/4 Ethernet ports/ FDK-bus+CAN interfaces/FDK-bus dual optical fiber net interface, 19 inch, 2 U
DF3611 MODEM	MODEM channels, Serial port switch channels, GPS time synchronous board
DF3670IED	72 DI, 24 DO, 6DCAI, ACAI sampling for 6 circuits of 3 phases 4 lines mode or for 4 circuits of 3 phases 3 lines. FDK-bus + CAN / Ethernet ports / Dual FDK-bus optical fiber net interface, 3 serial ports, '' 6U, LCD Keyboard
DF3671IED	48 DI, 12 DO, ACAI sampling for 1 circuits of 3 phases 4 lines mode . 19''/2 6U, LCD Keyboard
DF3672IED	32 bit DSP, 48 DI, 12 DO (1 synchronism close), ACAI sampling for 1 circuits of 3 phases 4 lines mode. 19''/2 6U, LCD Keyboard
DF3673IED	24 DI, 12 DO, 2DCAI, ACAI sampling for 1 circuits of 3 phases 4 lines mode. 19''/2 6U, LCD Keyboard
DF3674IED	16 DI, 2 DO, ACAI sampling for 1 circuits of 3 phases 4 lines mode. 19''/3 6U, LCD Keyboard
DF3675DI	96 DI. 19''/2 6U, LCD Keyboards
DF3676DO	36 DO. 19''/2 6U, LCD Keyboards
DF3677DCAI	64 single input DCAI or 32 dual input DCAI. 19''/2 6U, LCD Keyboards
DF3678	24 DI, 24 DO, 24/12ACAI. 19''/2 6U, LCD Keyboards.
F3679 ACAI	ACAI sampling for 8 circuits of 3 phases 4 lines or 13 circuits of 3 phased 4 lines mode. 19''/2 6U, LCD Keyboards.
DF3683VQC	Application for 1 three-winding transformer and 4 capacitor banks VQC adjustment



DF3600 Station Level Monitoring and control System

System Introduction

The whole system can be configured Client/Server (C/S) or Browser/Server (B/S). And each subsystem may be integrated flexibly according to the user's requirements.

The system adopts the fully distributed structure and distributes each function module to each net node in the system to ensure the system expansibility. The primary network adopts the dual-net mechanism distributary/ redundancy. The nodes connected with the net include the front-end processor workstation, real-time library and historic library server, SCADA workstation, WEB browse server, maintenance engineer workstation, microprocessor anti-maloperation workstation, communication workstation, report forms workstation, remote image monitoring and security alarming system workstation, etc.

The communication mode for data acquisition is dual-channel redundancy mode and supports multiple data acquisition interconnection schemes such as network interchanger, router, terminal server, etc. The communication mode supports multiple communication accessing modes including Ethernet, special line, carrier, microwave, etc, and the communication media may be fiber optics, twisted-pair, coaxial-cable, etc, to ensure the reliability of data acquisition communication.

FEATURES

- Distributed Redundant Multi-Server Net Architecture
- Hierarchical Full-Open System Design
- Advanced Graphical Display and Graph-Model Uniformity Technology
- Function-defined Tools
- Abundant Network Interconnection



Station Level System functions includes:

- **Data Acquisition, Processing and Communication Function**

  The adopted standard commercial communication component, independent of HW and SW platform, improves the communication processing ability. Each channel possesses independent communication I/O ability to eliminate the limits on extension of data acquisition channels and the speed improvement.

- **Supervision Function**

  Directly display the operation condition of each module and network communication status
  Human-Machine Interface (HMI)
  Tele-control and operation block
  Events and processing
  Sequence of Event (SOE)
  Post disturbance review (PDR)
  Time synchronization

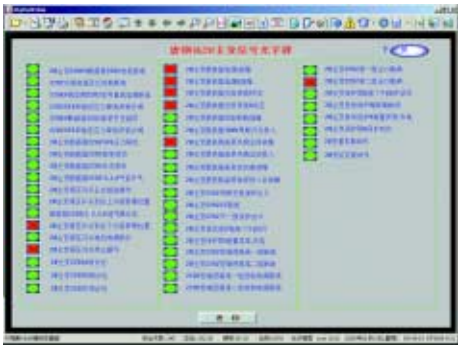

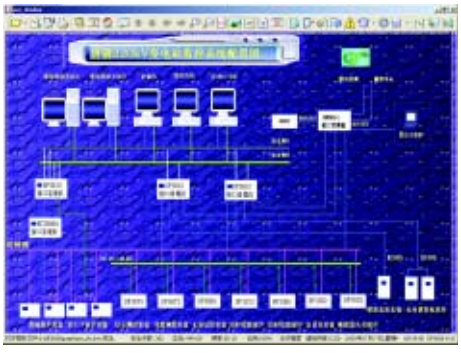

- **User-defined Operation Function**

  Provide the advanced bay oriented calculation processing platform. Easy to add new functions. With user-control language, users can self-define the operation procedure and process all the real points and virtual points occurred in the system.

- **Protection Management Function**

  The system may choose the individual protection workstation to process and supervise the protection information, and to receive the information including various protection trip signals, auto reclosure signals, protection operation supervision signals, protection settings and group number, event reports, fault record, etc. Protection settings, measured values, etc, can be checked and modified in the protection workstation.

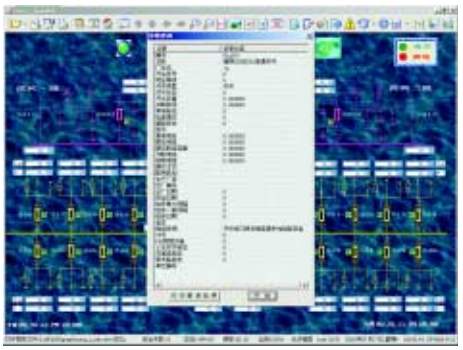

- **Automatic Record and Management for Operation Log**

  Operators can perform the record and management functions when keying little words or no words.

- **Web Real-time Browse Function**

  The system is configured the Web server and provides the Web homepage real-time display release. The general Internet browse mode is employed to view the real-time display. And the modification and update of the real-time display are all automatically refreshed by the Web server and maintenance-free is indeed implemented.

■ **Report Form Print Function**

Various flexible report forms are created and graphs can be inserted in them, such as curves, bars, circular charts and others. Daily and monthly report forms, operation records, manage information graphs, various statistics forms, power grid events and system events can be printed.

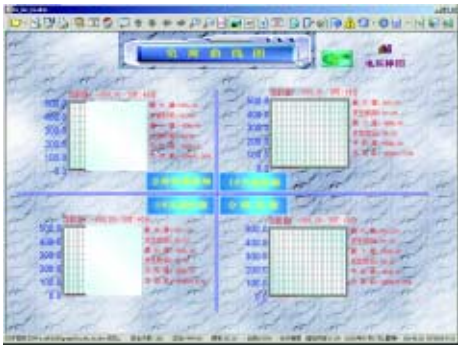

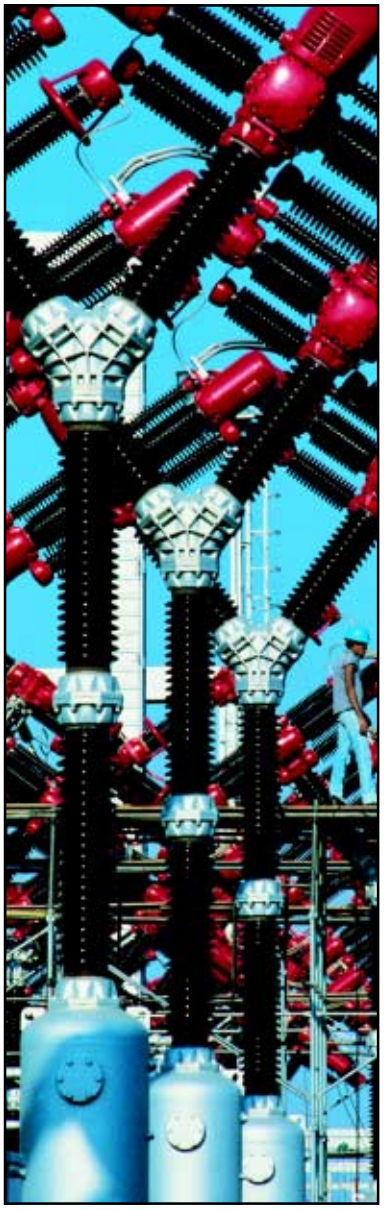

■ **Security Function**

All operators are offered some rights which specifies the limits to access to the system. The operator purview table and real-time event table used in the system are defined as the uniform GUI style of Microsoft SQL or SYBASE DB.

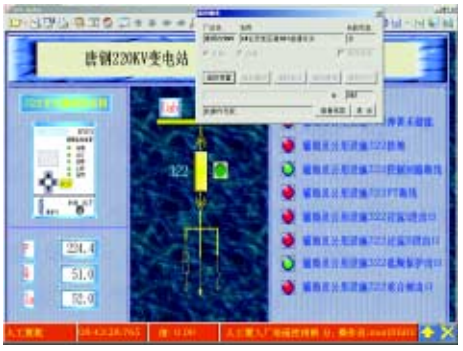

DF3300 Protective Relays, Automatic Devices, and Digital Fault Recorder

System Introduction

The DF3300 Substation Automation System can perform various functions such as protection, monitoring, communication and control, etc. based on the computer and network technology. It is a disperse, hierarchical and distributed object-oriented system, in which the IEDs and computers are substituted for lots of devices with single function such as relays, meters, indicators, automation devices and panels. And Local Area Network (LAN) is also substituted for plentiful cables. The protection relays in the system are relatively independent to improve the operation reliability of substation and reduce the maintenance work.

DF3300 system can meet the requirements for substation automation put forward in CIGRE, that is, telecontrol function (telesignal, telemeter, telecontrol, etc.), automatic control function (Voltage and Reactive Power Control, Load-shedding, Static Reactive Power Compensator Control, etc.), metering function, protection relay function, function for protection relay (fault record, fault location, fault line selection), interface function (with microprocessor anti-maloperation, power supply, meters, GPS, etc.), system function (communication with station and local SCADA, etc.).

Adopt the dual-configuration: Two communication interfaces are used as the hot-standby each other. And the operation mode of Dual-processor Dynamically Competing for Host is adopted, in which two processors can operate either as host and standby, or as two hosts. This dual-network adopts the mechanism of message-distributary and standby each other for communication for the best performance of the whole network to ensure the communication stability and data real time.

Adopt the two-level distributed network: It consists of a station level network and bay level network. The network meets the demands of IEC61850 communication about the network of the substation automation system.

Station-level communication network-Ethernet: its communication rate is 10Mbps/100Mbps. The communication media can be optical fiber cable, twisted-pair cable or coaxial cable. CSMA/CD (Carrier Sense Multiple Access with Collision Detection) is adopted, and the communication protocol is TCP/IP.

Bay-level communication network-two communication modes:

One is Ethernet, whose communication rate is 10Mbps, using optical fiber cable, shielded cable; the other is FDKBUS field bus, using optical fiber or shielded cable. For fiber optics cable, the network can be a dual-loop self-recover network and has the advantage of increased high reliability and flexibility. The protocol is the FNP protocol of the electric power industry.



DF3323 Line Over Current and Voltage Relay

Features

- New type of structure techincs design and embedded structure are adopted. And it can be either integrated into one panel or installed locally;
- IRIG-B format time synchronization;
- Communication interfaces using plug-in cards for the communication network upgrade. Different communication cards can fulfill different interface types such as FDKBUS, Ethernet, serial interface and so on. It can also adopt different communication media such as twisted-pair, optical fiber, coaxial cable, etc.;
- Programmable logic controller function;
- Advanced industrial chips; each device's CPU is the MOTOROLA 32-bit chip. The hardware system has the capability of anti-disturbance and high reliability;
- Choose 14-bit A/D sampling chips to improve the discrimination of data sampling and measure accuracy;
- SMT is adopted for main chips;
- Protection principles are perfect and reliable, and lots of field operation experience has been achieved;
- Each device functions are relatively independent, they don't depend on the communication network if they can be fulfilled locally. Each device can continuously operates even if the station-level communication networks completely fail;
- Large-screen LCD, Chinese/English menu operation.

DF3300Series Product List:

DF3320 Line Distance and Zero-sequence Current Relay
DF3322 Line Directional Over-current and Voltage Relay
DF3323 Line Over Current and Voltage Relay
DF3330 Current Differential Relay for Three-winding Transformer
DF3331A Backup Relay for Grounded Side of Transformer
DF3331B Backup Protection Relay for Ungrounded Side of Transformer
DF3332 Gas Relay for Transformer
DF3333 Current Differential Relay for two-winding Transformer
DF3360 Capacitor Bank Relay
DF3382 Automatic Throw-in Equipment of Emergency Power Supply
DF3383 Reactive Power Automatic Control Unit for Single Transformer
DF3386 Digital Fault Recorder and Fault Location Device



DF3300 Main Transformer Protection Panel

DF9000 series Distribution Automation System

Overview

The DF9000 Distribution Automation and Management System provides modern tools for the distribution power network's security, economical operation. It guarantees power quality, perfecting facility management as well as increasing working efficiency and providing a series of solutions for the distribution automation system.

The system supplies the functions of power grid monitoring, control, failure management, power balance and charge transfer. It is applicable to the 10KV and 35KV power grid, and can be used by large or middle-sized cities, large corporations and oil fields, etc.

At present, there are more than 60 domestic power companies using the DF9000 production.

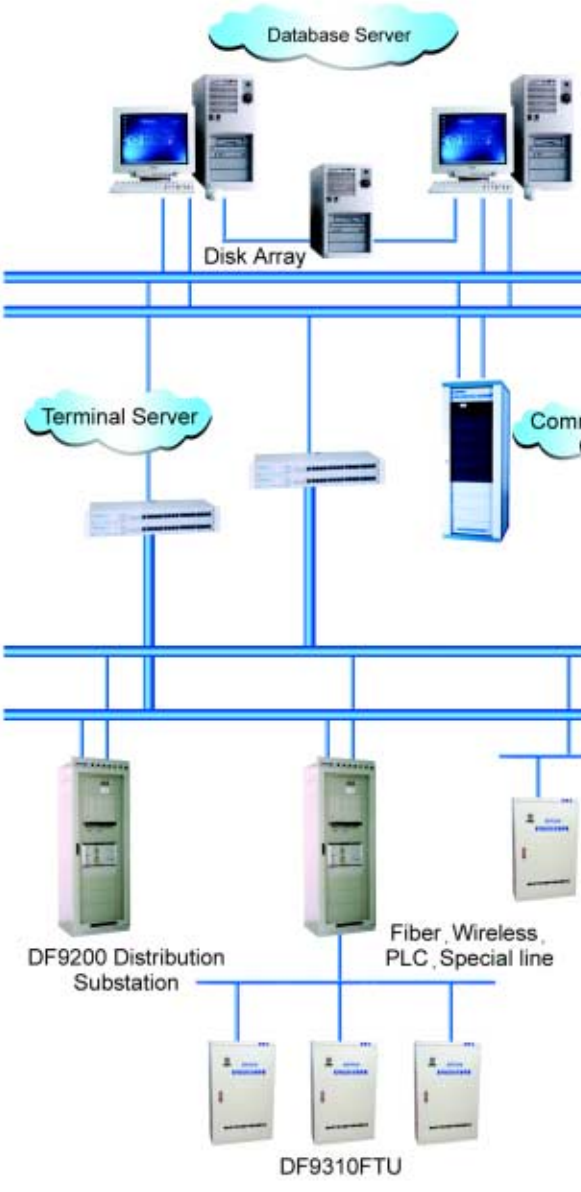

Typical Configuration

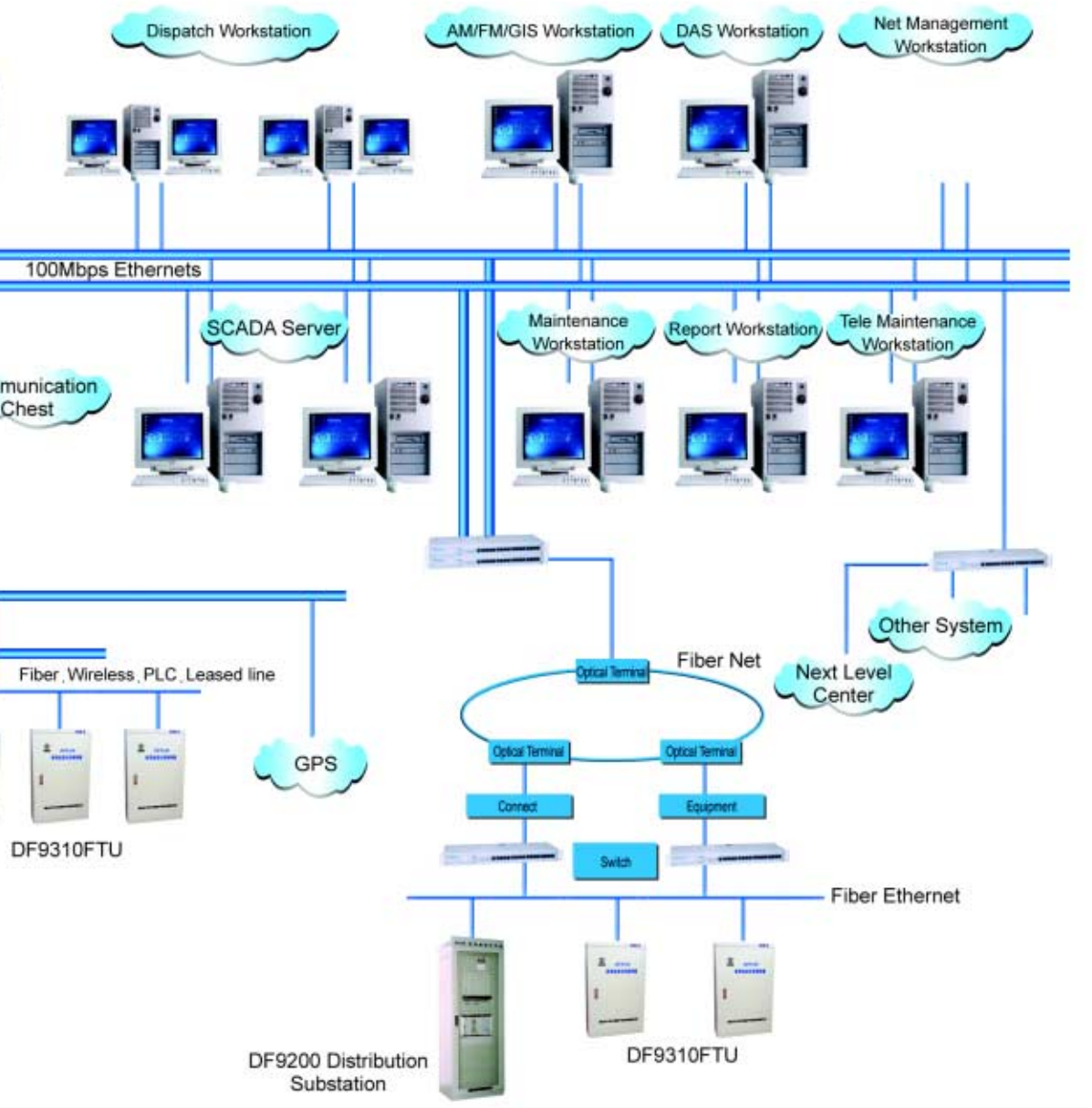

DF9000 production includes

- DF9100 Series Distribution Control Center SCADA and DMS system
- DF9200 Series Distribution Automation Sub-station system
- DF9300 Series Distribution Automation Terminal units and distribution communication system

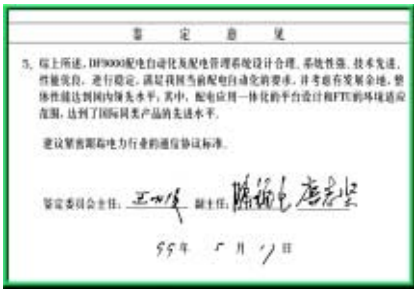
鉴 定 意 见

5、综上所述，DF9000配电自动化及配电管理系统设计合理，系统性强，技术先进，性能优良，运行稳定，满足我国当前配电自动化的要求，并考虑有发展余地，整体性能达到国内领先水平，其中，配电应用一体化的平台设计和FTU的环境适应范围，达到了国际同类产品的先进水平。

建议暂按部标电力行业的通信协议标准。

鉴定委员会主任：王小华 副主任：陈锦光 唐志坚

95年 5月 7日

The system has met the certification requirements of the National Electric Power Company,and the conclusion is "the system is designed scientifically with systemized perfection, advanced technology, excellent function, and stable operation, which meets the requirements of our country. Its performance is high level and in accordance with national and international standards. The integrative design of the platform and the range of adaptability to the environment are highly advanced."



The system was listed by the State High Technology Industrial Development Project, and was ranked as the NATIONAL HIGH TECH DEMONSTRATION PROJECT.

System Features

- Provides a whole solution for Distribution Automation of City and County power grids.
- The complete integrative design of SCADA/DMS/DAS/FA systems.
- Flexible feeder automation (FA), applicable to a variety of faults.
- Performs real time grid reconstruction, improves service reliability and power quality and reduces grid power loss.
- Flexible and high price/performance ratio communication system which supports various communication modes.
- On various GIS platforms, the DMS system provides excellent functions.
- Based on the B/S (BROWSER/SERVER) structure, the distribution management system provides FLOW MANAGEMENT and yields a high quality performance ratio.



DF9310 FTU



DF9310II Ring Switchgear FTU



DF9200 Distribution Automation Substation

DF9000 Serial Product List

ITEM	Production Model
Distribution Automation Master Station	DF9100 Distribution Control Center SCADA/DAS/DMS
	DF8900 Distribution Control Center SCADA/DAS/DMS/TMR
	DF9101 IEC61970 and CORBA adopted Distribution Control Center system
Distribution Automation Sub-station	DF9200 Distribution Automation Communication Devices
Distribution Automation Terminal	DF9310 Pole Switch Supervisory Control Terminal (Ordinary-type, Ethernet-type)
	DF9310 Ring Supervisory Control Terminal
	DF9310A Switch Station Supervisory Control Terminal
	DF9310B Distributed Supervisory Control Terminal
	DF9320 Distribution Transformer Monitor Terminal
	DF9320A Distribution Transformer Monitor And Control Terminal

DF6000 Energy Acquisition and Billing Automation System

General

The Energy Acquisition and Billing Automation System, DF6000 adopts the idea of systematization design, and applies advanced computer network communication and control technology, with hierarchical, distributed and open architecture. Full consideration has been given to the generality and practicality of the system, and advanced technology has been taken to fulfill automatic acquisition, transfer, storage, analysis, billing, management, supervision, print and WEB publication of the energy data of the transmission, distribution and consumer networks. The DF6000 system is supplied with interfaces with other systems such as DMS/EMS/MIS/LMS, which satisfies demands of electrical power energy suppliers of various .

Features

- Automatic, complete, accurate, real time, flexible data acquisition, transfer, and storage of meters and terminal monitoring. Data will not be lost in the event of power failure.
- Metering unit and system operation monitoring and registration of metering tampering.
- Supplying original energy readings with MIS for the purpose of revenue and metering information share.
- Energy statistic. Fulfilling line loss statistics and analysis including fraud analyzing. Calculation & analysis of network loss, transformer loss, and bus unbalance.
- Monitoring of energy data of important grids of electrical networks.
- Computing electricity reliability.
- Statistics and analysis of voltage and power factor eligibility rate.
- Data browsing through Web, capable of integration with other systems between enterprises.
- Statistics of energy data with tariffs.
- Able to act as the information basis of mode of load integration with that of energy dispatching.



Meter Assembly Line

System Modules

The application system software is of hierarchical and modular design, which consists of the basic system, expanded system and advanced application system. The above is expatiated below:

1) Basic system:

The basic system, which contains the system platform construction, is the most fundamental application software configuration and the basis of other systems. The basic system includes the following modules:

- Data acquisition
- Database management
- Archive management
- System management
- Statistics & analysis
- Reports & forms

2) Expanded system:

The expanded system consists of modules of expanded functions of the basic system.

- WEB browsing
- Graphics

3) Advanced application system:

The advanced application system fulfills the system's advanced application like analyzing function, and supporting decision-making.

- Evaluating
- Theoretical line loss analyzing
- Load prediction
- GIS£¨Geographic Information System£©

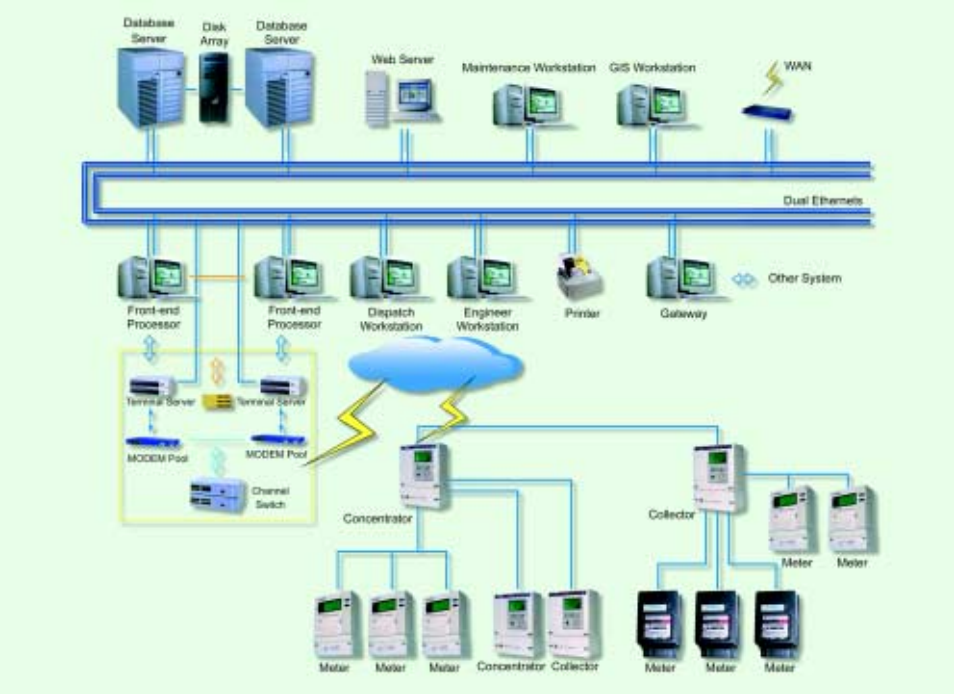

DF6000 System Typical Configuration

Static Three-phase Multi-function Watt-hour Meter Series

Primary products of DTSD178/DSSD178/DTSD179/DSSD179 series are shown below:

Type	Mode	Accuracy Classes		Rated Voltage	Pulse Constant		Standard
		Active	Reactive		Active	Reactive	
DSSD178	3P3W	0.5S	2.0	3 ¡Á100V	5000 imp/kVarh	5000 imp/kVarh	GB/T17883-1999 IEC60687:1992
DTSD178	3P4W	0.5S	2.0	3 ¡Á57.7/100V 3 ¡Á220/380V 3 ¡Á230/400V			
DSSD179	3P3W	1.0	2.0	3 ¡Á100V			GB/T 17215-2002 IEC 61036:1996
DTSD179	3P4W	1.0	2.0	3 ¡Á57.7/100V 3 ¡Á220/380V 3 ¡Á230/400V			

Other types are available at the request of the user.



DSSD178



DSSD179

Features

- Low power consumption design, power consumption in a circuit is less than 1W, 2VA.
- A switching power supply, wide-voltage power supply(0.5~1.3 rated voltage).
- High ability to sustain overvoltage, the upper limit of the input line voltage of all the products is 500V(AC).
- Careful design of hardware and software for reliability, the ability of self-diagnostics is high.
- High speed AC sampling with high precision that ensures the reliable measurement of electric energy.
- Measurement, storage and display of active and reactive energy in both directions, with four quadrant reactive energy and maximum demand and occurrence times,etc.
- Reliable measurement of the voltage, current, active & reactive power, power factors and apparent power of the three phases in real time.
- Recording events such as missing voltage, phase break, Max & Min voltage, Max & Min power factor, voltage allowance rate, power factor allowance rate, settings, clear energy, clear demand, system alarm etc.
- Time-of-Use metering, maximum 9 tariff rates, 12 time zone, 10 time segments tables and 12 time segments in a day.
- The display contains a continuous loop display and key press switch display which can be set by the user.
- Copies meter data backup during power failure with built-in battery , waken-up by key press or remote control (optional).
- Maximum two outputs of overload alarms (optional).
- Load profile (optional).
- Providing RS485, RS232 and local optical port, the communication speed can be set between 1200bps and 4800bps£¬supporting local and remote maintenance and reading, with the possibility of using 2 RS485 ports.
- Remote communication is in accordance with DL/T 645-1997 and IEC1107 data transport protocol£¬facilitating connection to metering devices of other vendors.
- Integrated clock and calendar, automatic leap year compensation, accuracy less than ¡Â0.5 sec/day, time calibrated through the network.
- Temperature Range: Operating: -20¡æ~£«55¡æ
  Limited: -30¡æ~£«60¡æ
  Storage: -35¡æ~£«70¡æ
- Housing = protection against tampering£¬smaller volume£¬Dimensions : (248 ¡Á175 ¡Á70mm), Weight : about 1.5kg.

Energy Data Acquisition Terminal Series

General:

The data acquisition terminals are classified as the Plug-in type (DF6201), and the wall-mounted type (CLL064-1c, CHL064-1j). They are capable of acquiring energy data and switching values of static meters and pulse energy meters and transmitting the data to the master station. These data acquisition terminals are suitable for energy acquisition for most consumers of various sizes from provincial distributors to substations, power plants, small/medium enterprises, mines, oil fields, and ports.

The data acquisition units produced by Dongfang Electronics use advanced technologies like a Hot-Spare CPU, multi-CPU parallel processing, Industry Field Bus (CAN), CF (Compact Flash) and real time operating systems.

Features:

- CPU redundancy.
- RTOS (real time operating system).
- Flexible storing capability; Meter reading intervals programmable from one minute to 45 days.
- Outgoing and incoming protocols totally open to customers, able to support any given protocols.
- Compatible with various channels, easy configuration, and of high adaptability.
- Data not lost in case of power interruption.
- Local/remote reading and maintenance.
- DC/AC double power supplies.
- Complete thunder-proof and EMC measures.



DF6201 Chassis Energy Acquisition Terminal Unit



CLL064-1c Collector



CHL064-1j Concentrator

DF0210A Series of High-frequency Switching DC Power Supply System



DF0210A series of high-frequency switching DC power supply system are designed for power plant, 35kV～500kV substations, electrical railway, city subway and other places where the DC power supply is needed. According to the different charging module employed,DF0210A series products are classified into three groups, namely the small system, the medium system and the large system.

Characteristics

- Reliable modularization design, N+1 backup of charging modules, autonomous current sharing technique, and optional configuration.
- 32 bits powerful SCM controlled supervision unit, large LCD display.
- Support multiple communication protocols and easy to connect to remote supervision system.
- Prolong battery's life by intelligent battery management.
- Configure sine wave power inverter(220VDC～220VAC) and DC converter(220DC～48VDC) be able to provide 220AC and 48VDC power supply.

Specifications

- Input voltage: 380V～20%, 50Hz～10%
- Power factor: 0.9(small system and medium system),0.95(large system)
- Efficiency: ≥92%
- Output voltage: 220V,110V
- Voltage accuracy: ～0.5%
- Current accuracy: ～0.5%
- Ripple coefficient: ～0.1%
- Current sharing imbalance: ～5%

Small System

- Charger capacity: 10A～20A(220V), 20～40A(110V)
- Application: 35kV substation
- Connection type: single bus
- Battery: 24Ah～100Ah

Medium System

- Charger capacity: 30A～80A(220V), 60A～160A(110V)
- Application: 220kV,110kV,35kV substation,power plant
- Connection type: single bus,subsection single bus
- Battery: 100Ah～500Ah

Large System

- Charger capacity: 90A～360A(220V), 160A～480A(110V)
- Application: power plant(water power plant)～500kV substation
- Connection type: single bus(subsection single bus
- Battery: 500Ah～2000Ah

High-frequency Switching Charging Module

- Charging Module with Single-phase Input

DF0230-220/5	Rated output voltage£º220V Rated output current£º5A
DF0231-220/10	Rated output voltage£º220V Rated output current£º10A
DF0235-110/10	Rated output voltage£º110V Rated output current£º10A
DF0236-110/20	Rated output voltage£º110V Rated output current£º20A

- Charging Module for Three-phase Input

DF0233-220/30	Rated Output Voltage£º220V Rated Output Current£º30A
DF0237-110/40	Rated Output Voltage£º110V Rated Output Current£º40A

DF0240 Series of Supervision Unit

- A Motorola's 32-bit SCM is used to ensure high performance and great data processing capabilities.
- Several serial communication ports make it easy to connect with other intelligent equipment.
- Four remote functions£ºRemote measurement, remote signal, remote control and remote regulation.
- Battery Management£ºAutomatic conversion among constant current charge, equalizing charge and floating charge.
- Alarm: Sound and light alarm and remote alarm.

Intelligent High-frequency Switching Power Supply System





DUM series of intelligent high-frequency switching power supply system are multifunctional, high-powered and high reliable combined power supply systems designed for suiting the demand of communication in modern times. Each system possesses module-combined structure, integrates rectifier modules, supervision unit, lightning protection device, distribution unit, charging unit and power supplying function in one system. The capacity of system can vary from 40A to 2500A upon user's requirements. This series have been widely used in electric power industry, China Unicom, China Mobile, China Railcom, broadcasting and television industry, police communication and metallurgical industry.

All products including DUM186-48/20 power supply system, DUM201-48/50 power supply system, DUM201-48/50B power supply system, DUM201-48/50C power supply system and DUM185-48/100 power supply system have passed the Products Quality Inspection tested by Posts and Telecommu-

nications Industry Products Quality Surveillance and Inspection Center (PTPIC), obtained Network Access License for Telecommunication Equipment awarded by Ministry of Information Industry(MII), PRC, and passed the technological production identification organized by MII.

System composition and characteristics

- Adopts active or passive power factor correction technique, possessing high power factor. Advanced power conversion technique.
- Perfect battery management and temperature compensation functions prolong battery's life.
- Hot-Plug technique makes it convenient to replace.
- Advanced current-sharing techniques guarantee good current-sharing.
- User-friendly man-machine interface, easy to learn and use.
- RS232 interface and Modem interface, realizing local and remote centralized supervision.
- A variety of flexible alarm modes, such as audible and visible alarm, pager alarm, telephone alarm and dry contact alarm.
- Offers kinds of communication modes and protocols.
- Remote signal, remote measurement, remote control and remote regulation functions match the demands of unattended system.
- Professional EMC design, with strong anti-electromagnetic interference capability.

DC-DC ISOLATED CONVERTERS

- Fixed Input Voltage Series
- Wide Range Input Voltage Series
- High Power Density Series

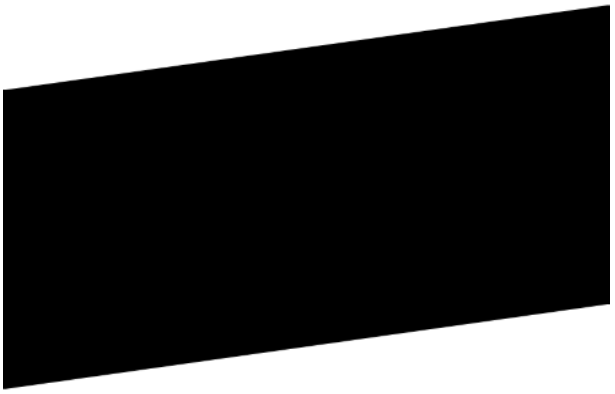



S&C System for Power Equipment and Environment

Overview

In order to facilitate our clients of communication industry to realize unmanned automatic control of communication stations so as to perform effective and timely maintenance and management, Dongfang referring to the relational standards and technical specifications, developed a new generation monitoring system DF0400 Supervisory Control System for Power Equipment and Environment.

System Hiberarchy

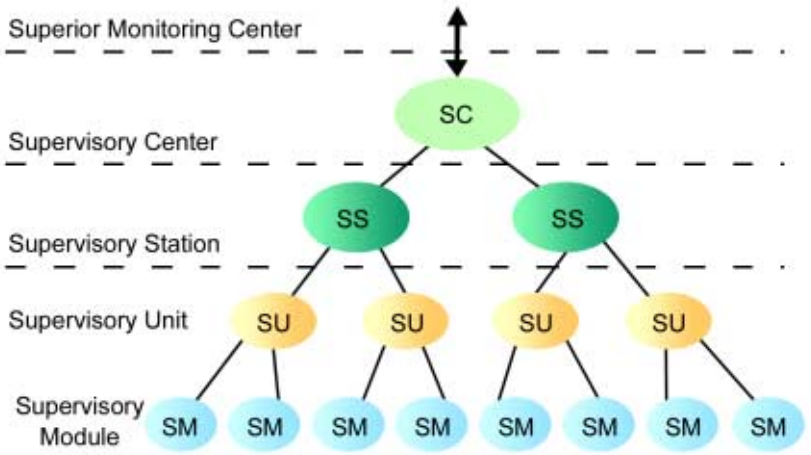

- SC (Supervisory Center) performs centralized monitoring over all the SSs and SUs.
- SS(Supervisory Station) performs centralized monitoring over all the SUs it charged so as to realize remote maintenance and operation.
- SU(Supervisory Unit) is a group of equipments to be monitored in a base station.
- SM(Supervisory Module) is responsible for gathering real time data and directly controlling the monitored equipment.
- In addition, DF0400 can exchange data with the superior monitoring center and local network management center.

System Architecture

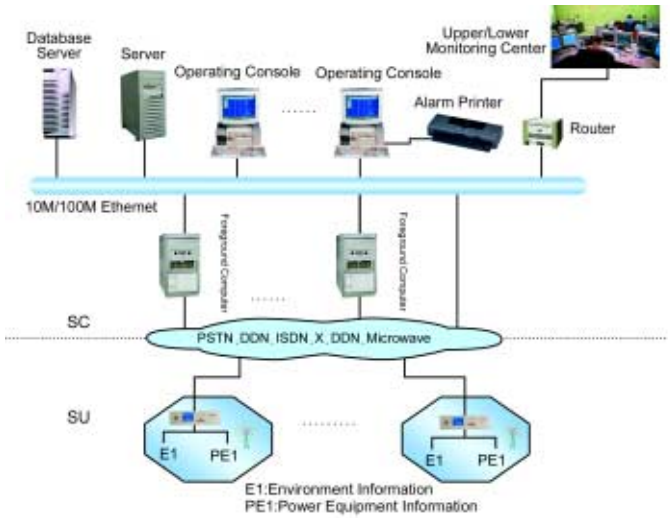

JSQ-31NT Series Digital Dispatching Communication System

The system is designed in accordance with the standard of CCITT, the dispatching switch standard of national Power Company and the digital switch standard of the Ministry of Information Industry.



JSQ-31NT Series Digital Switch

System Components

- JSQ-31NT Series Digital Switch
- Maintenance Console and Accounting Console
- DF7800 and DF7801 Intelligent Dispatching Consoles
- CD-20 Touching Dispatching Console

System Features

- Completely separate and modularized configuration and side by side backup of the main control system
- The capacity is ranged from 8 to 3000 and can be configured flexibly
- Multiple interface modes, such as User interface , Long line user interface, Two-wire E/M , Four-wire E/M interface, Electric power carrier wave interface, Digital ISDN-R interface (30B+D), Two-wire circum-circuitry trunk interface, Communications supervising interface, Four-wire long distance trunk interface, 2M PCM interface
- Multiple networking Signallings
- Multiple special service functions
- Multiple dispatching terminals
- The main parts of the Switch are manufactured abroad to assure the reliability
- The installation and maintenance of the system are convenient
- Complying with International and National Standards

System Functions

- Accounts Calling
- Fully flexible number
- Multiple routes
- Multiple billing modes
- Tandem Trunk
- Voice Dialing-In
- Direct-call users
- Having the functions of administrative switch
- Conference calling
- Multiple dispatching consoles
- Automatically choosing of route
- Fully transferring trunk number
- Voice mail box
- Checking busy-tone
- Instruction system function



CD-20 Touching Dispatching Console



DF7801 Intelligent Dispatching Console

GSM Wireless Communication System

This Community GSM System is based on 1.8G/1.9G wireless communications system, including Central Switch Unit (CSU), Network-Managing System, Base Station Controller, Base,etc.

System Features

- Support 120000 users and each user can get the capacity of 25mErl
- Fully making use of existing resource of telephone network
- The layout of the network is feasible
- Flexible OMC operation
- Abundant interfaces, including ITU SS7 ISUP; TUP; V5.2; GSM compliant A interface; GSM compliant Abis interface; GSM 04.08
- Low construction cost
- Many systems can work together and backup reciprocally
- Can use the existing mobile telephones
- High-power Base Station
- Value-added service functions, such as the services of advance paying, short message and voice mailbox

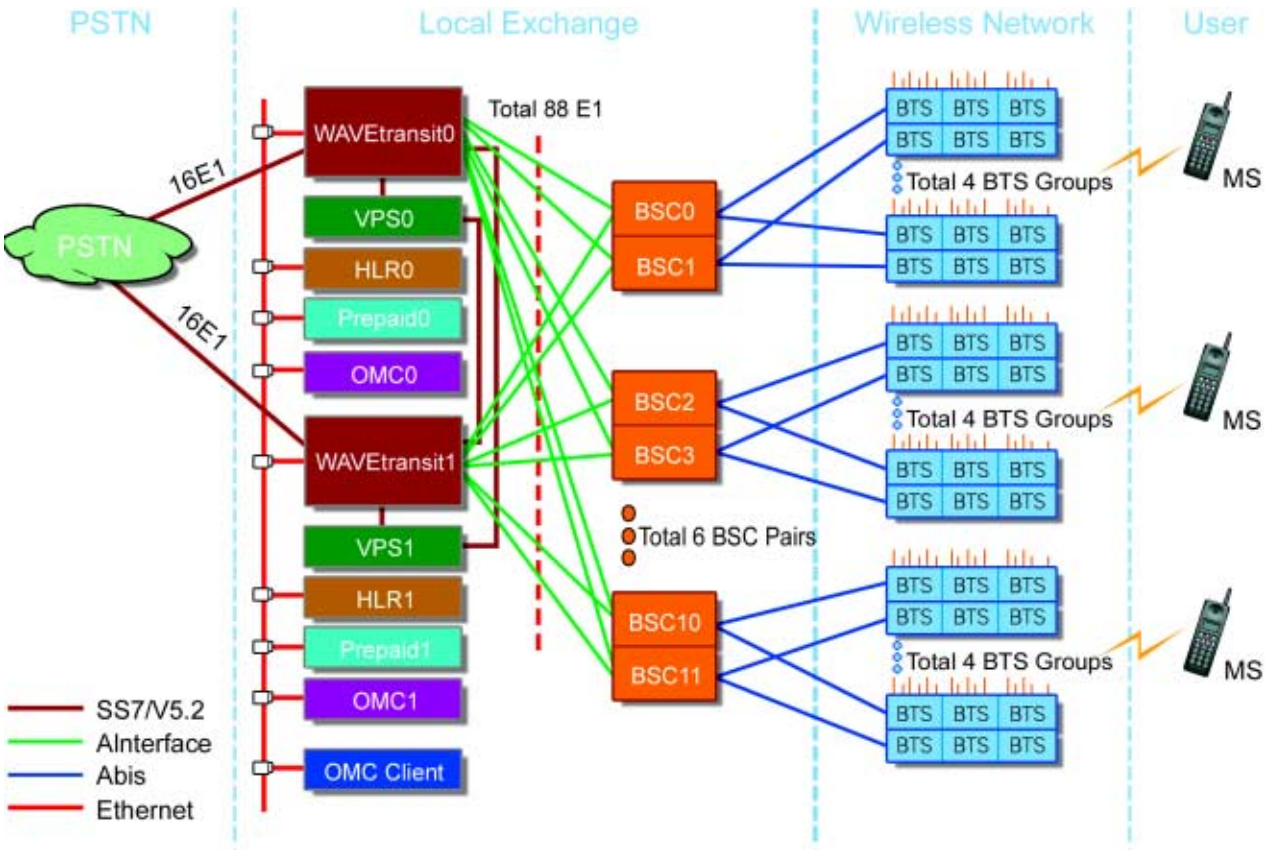

AMR-2000 Multi-channel Digital Recording System

This system uses the advanced technology of digital voice communications and ADPCM coding which are in accordance with the CCITT standard. So it has the features of high signal/noise ratio, excellent timbre, international standardization, no distortion and clear speech.

System Features

- Optimal Partner
  In order to be competent for round-the-clock recording working, the system is equipped with high-quality personal computer or industry computer and special digital voice card
- Multi-level Password
  The users with different levels will exert different access operations
- Supporting Remote Inspection
  You can process Remote inspection via voice introduction
- Strong Plasticity
  Free to configure the recording channel capacity
- Great Memory Capacity
  Each 1G HD space can record voice capacity to 150 hours
- Many Controlling Modes
  Voltage control, voice control and keyboard control
- Exact Recording Time
  Complying with the global standard time by the Satellite Chronometer
- Support Client-Sever structure
- Wide Applications

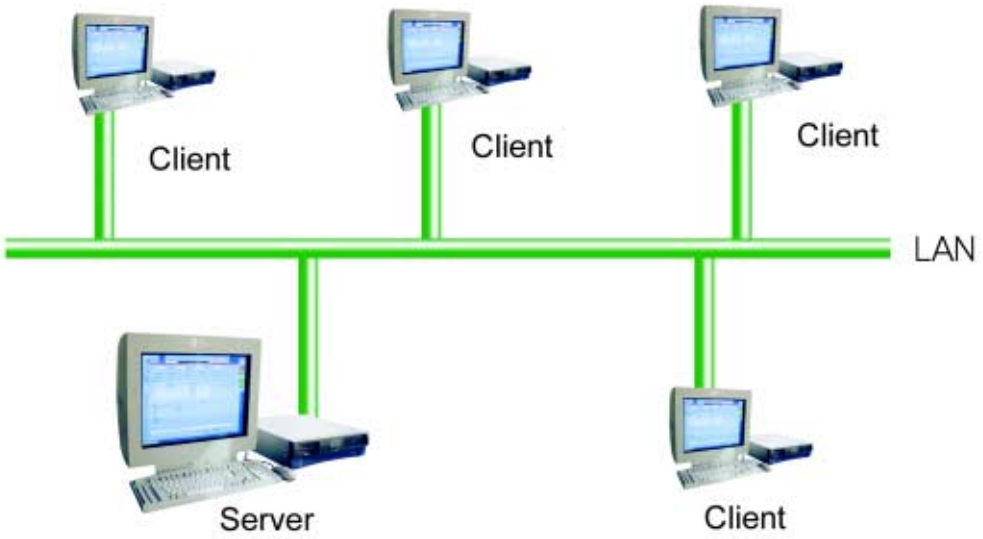

High Efficient and Economic Video Meeting Scheme



With the rapid development of global information industry, the media of understanding and communicating information have been developed from traditional ones such as paper, pens, books and voice to modern ones such as light signal, sound signal and electrical signal, which can express information much accurately, rapidly and abundantly. To satisfy the requirement of the market, the technologies of multimedia computer and communications have been combined to gradually form the advanced multimedia communications technology. As one of the applications of this technology, the video meeting system can transmit various image signals, voice signals and data among different multimedia meeting terminals by the communications network. It is no difficulty to see that the system can greatly improve the working efficiency. We can forecast that in the near future, the video meeting system will be widely applied to many fields, such as long-distance meeting, long-distance supervising, long-distance teaching, long-distance financing and long-distance therapy.

Advanced Performance

- Most efficient and high-quality decoder
- Completely according with the H.320 and H.323 standard
- Integrating high-quality voice and video source
- Supporting FECC (H.281)
- Supporting MCU controlling (H.243)
- Having the perfect echo-eliminator to Broad Band and Narrowband
- Multiple networking interface
- Realizing the application of T.120 by MS NetMeeting software
- Friendly and wieldy user interface
- Convenient remote controller or control board
- High-speed connecting Internet (128Kbps)
- Powerful desktop functions
- Supporting H.323 video meeting on LAN and ATM
- Supporting additional VGA supervision, sharing common data and Compatible Windows95/98/NT



Mobile Communications Monitoring and control System

This is a set of social public security and remote monitoring, control and management system, which uses many modern technologies, such as GSM, GPS, GIS, SMS and computer network communications and data processing.

System Features

- Remote monitoring and controlling the object within the GSM network
- Using the existing resources (Data Lines) to connect with necessary departments such as 110, 119, 120 and 122, sending positing, alarming and SOS information to these departments respectively
- Wide applications

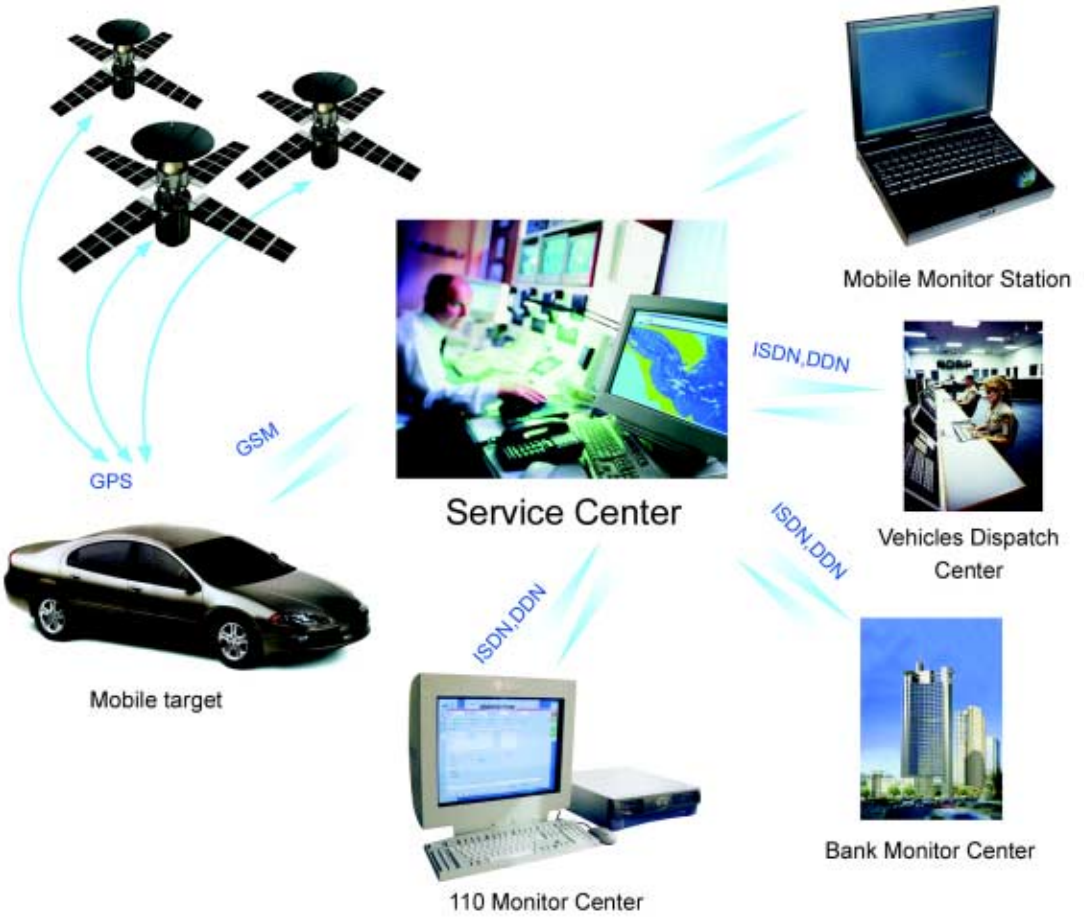

This system is based on the global wireless communications network and takes GPS and GIS as the positioning and monitoring platform. It also uses the advanced computer network communications and DP technology to process information. Accordingly, it is a leading 3G system of the country.

Data integration and transmission

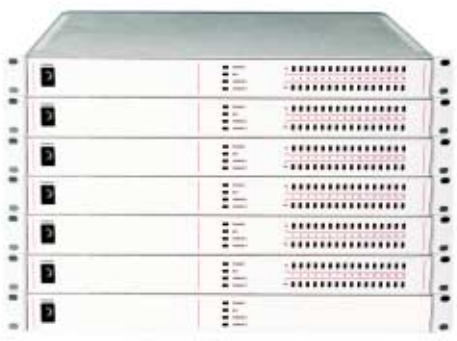

As a professional manufacturer of communications system integration, the communications subsidiary company of Yantai Dongfang Electronics Information Industry Co.,Ltd. has cooperated with many famous manufacturers of communications system integration in order to provide stronger technical support and more satisfactory service.

Networking Solution

The communications subsidiary company provides Ethernet, high-speed Ethernet, 1000M Ethernet, Data Communications Network and Broad Band Network devices. Moreover we can provide a series of service for client, such as choosing scheme, system analysis, design and applications.

Switch

- 10/100/1000M Ethernet Switch
- ATM Switch
- Edge/Core Switch
- 1000M Administrable Switch
- Backbone Multilayer Switch

Voice,Data and Video Integrated Access Platform

- Multi-service Access Switch
- Multi-service Core Switch
- Multi-service FR/ATM/WAN Switch

Hub,Concentrator and Router

- 10/100M Hub
- IP Concentrators
- Wireless LAN Concentrators
- Access Router
- Multi-service Access Router
- 1000M Switch Router

Optical Transmission Devices and Power Carrier

- Veneer structure series
- Multi-service optical transmission devices
- Digital transmission device of Optic synchronization
- Digital Power Carrier
- Analog Power Carrier

AB7000/3.5GHz Broadband Wireless Access System

AB7000 Introduction

The AB7000/3.5GHz is a broadband wireless access system. It employs a point-to-multipoint (PMP) architecture and is designed to provide a wide range of voice and data telecommunications services with fiber equivalent quality. Furthermore, the system can also be used as a backhaul system for narrowband wireless network or mobile stations.

The designed objective of AB7000 is to provide telecommunication operators and enterprise customers (small and medium businesses) with a flexible, fast, low- cost solution for network access.





System Features

- use 3.5GHz frequency band
- each RF carrier can range from 64 kbps up to 4.096 Mbps
- flexible and modularized network configuration
- reliable radio link, availability up to 99.999%
- with the advantages of minimal initial investment, large coverage, easy installation and economical maintenance
- suitable for widely-dispersed area and meet the requirements of enterprise customers and MDU users

Application For Mobile Base Station Connection

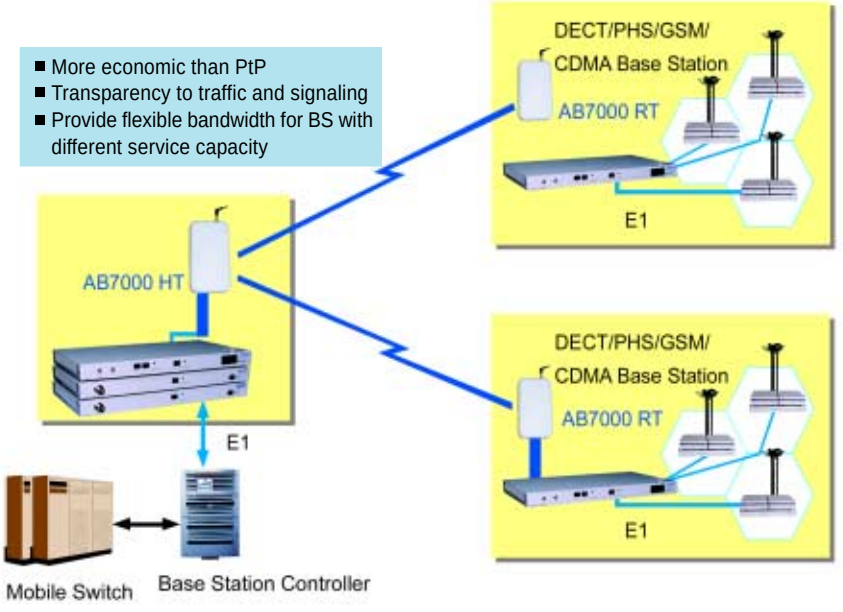

AB9400/26GHz Broadband Wireless Access System

AB9400/26G Broadband Wireless Access System adopts Hughes patented technology and can provide services to network operators and users that have large service requirements with fiber equivalent quality, achieving the last-mile access. As the ideal choice to provide voice, data, video and internet services, the AB9400 can offer particular solution in broadband wireless access (BWA) field.

System Structure

AB9400/26G Broadband Wireless Access System employs a point-to-multipoint (PMP) architecture. It consists of three components: Hub,Remote Terminal (RT) and Element Management System (EMS). The hub is logically divided into sectors and consists of a set of hub terminals (HTs). The function of each part is as follows:

Hub: Hub can centralize services and signals from equipments in different sectors and connect to backhaul network.

RT: Each RT can transmit the remote services back to hub and receive data from hub. It is installed at the customer premise sites to provide voice, data services etc.

EMS: EMS can provide the management of configuration, failure, performance, security and gather detailed information about the system. The software platform is UNIX. It's operation system is Sun Solaris.

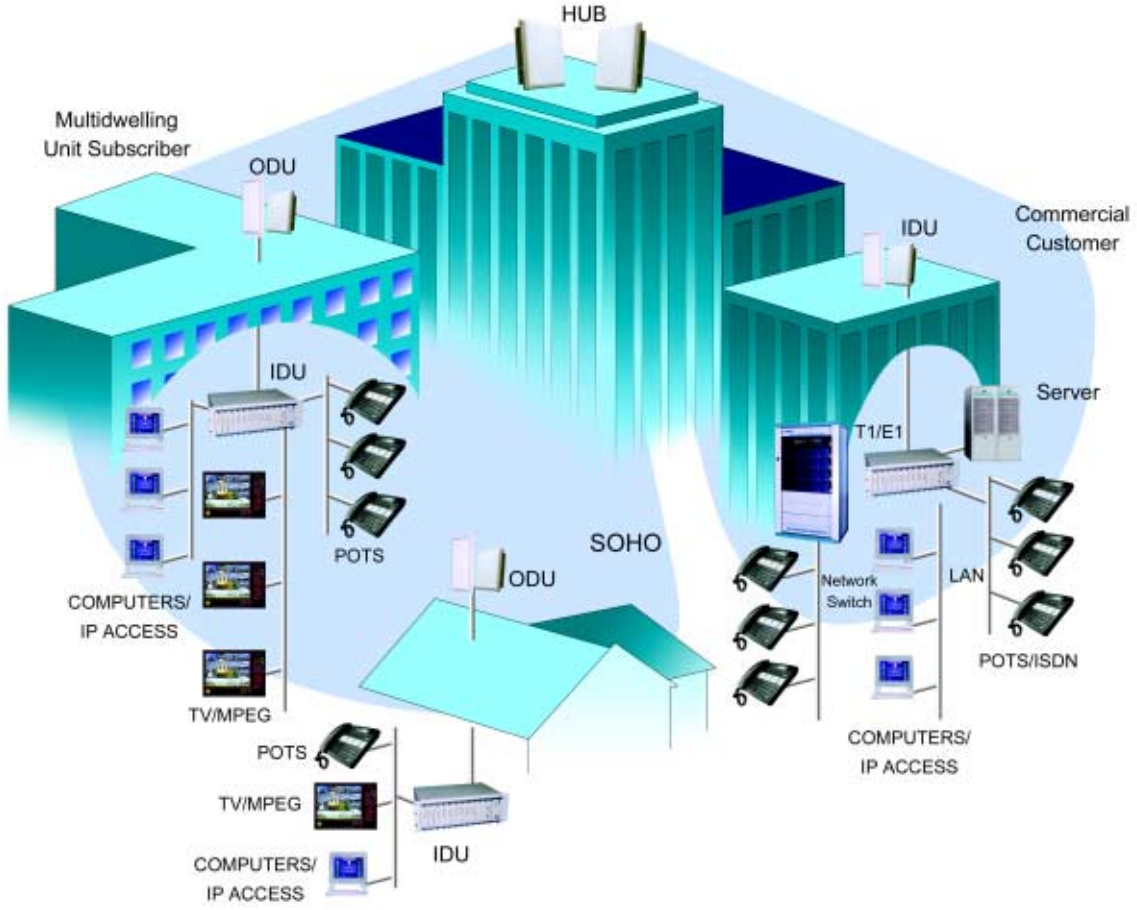

- Use 26GHz frequency band
- Each RF carrier can range from 64 kbps up to 30 Mbps
- Support the large capacity and two-way services such as voice, data , video etc.
- Offer backhaul connectivity for narrowband or mobile wireless networks
- Support point-to-point (PTP) radio application as well as PMP in a HT





Tycipal Appliantion

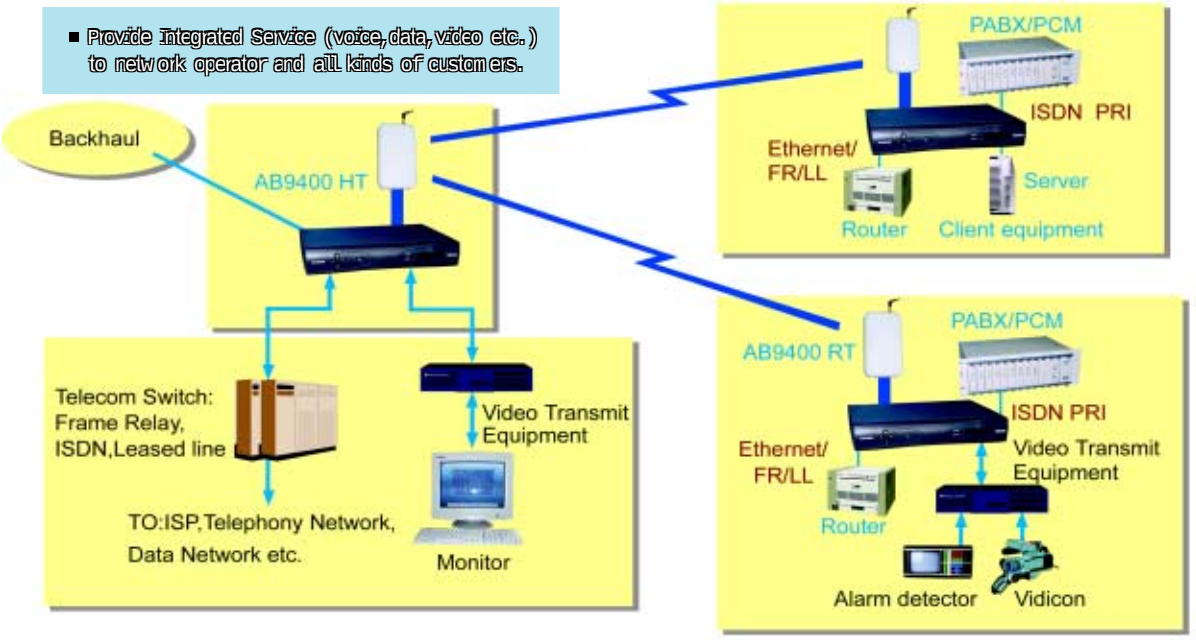

DF2000 EPE-MIS Overview

The DF2000 EPE-MIS(Electric Power Enterprise MIS) solution is aimed at power utilities. The software involves a multilingual database, which allows each of our clients to work with the software in their own language. With many projects it is possible to work in multiple languages with the same software and database.

Technical Features

DF2000 EPE-MIS is based on advanced Client/Server and Client/Browser/Server technology, which includes management system of technology about electricity generating, transmitting, distributing, and consuming, management system of electrical power selling, Customer Relationship Management, Office Automation (OA), e-commerce, Intranet/Internet, Network Integration, Geographic Information System of distribution System (GIS), and communication with SCADA/EMS/DMS and other Information system. The information of administration and community department and process of electrical power generating, transporting, distributing and consuming can be dealt expediently in EPE-MIS. EPE-MIS offers numerous features designed to enhance a utility Õs ability to efficiently and cost-effectively monitor, control, coordinate operations and maintenance throughout large geographical areas. Its modular functionality can be tailored to the needs of each customer, from small distributors to large power utilities.

System Compositions

DF2010 Electric Power Enterprise Management Information System
DF2020 Electric Power Supplier Management Information System
DF2060 Enterprise Customer Relationship Management System (Call Center)
DF2070 Electric Power Marketing Decision-making Support System

Projects

DF2000 EPE-MIS has been installed more than 100 enterprises in China, which are from provincial to regional electric power companies.

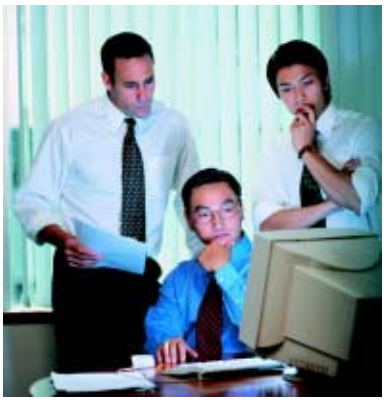









Quality Assurance system





Abbreviation Words List

Abbr.	Explanation
AGC	Automatic Generation Control
API	Application Program Interface
CORBA	Common Object Request Broker Architecture
DA	Distribution Automation
DAS	Distribution Application Software
DMS	Distribution Management System
DPF	Dispatcher Power Flow
DTS	Dispatcher Training Simulation System
EMS	Energy Management System
FA	Feeder Automation
FTU	Feeder Terminal Unit
GIS	Geographic Information System
IED	Intelligent Electronic Device
LFS	Load Forecasting System
LLF	Long-term Load Forecasting
MCU	Main Communication-processing Unit
MIS	Management Information System
MLF	Middle-term Load Forecasting
OPF	Optimal Power Flow
PAS	Power Analysis Software
RTU	Remote Terminal Unit
SCADA	Supervisory Control and Data Acquisition
SCCC	Short Circuit Current Calculation
S&C	Supervisory and Control
SE	State Estimation
SLF	Short-term Load Forecasting
SOE	Sequence of Event Recording
TMR	Tele-Meter Reading
TTU	Transformer Terminal Unit
VRO	Voltage Reactive Power Optimization

YANTAI DONGFANG ELECTRONICS INFORMATION INDUSTRY GROUP, LTD.

Address: 288 Shihuiyao Road, Yantai, China
Tel: +86-535-658-2041 658-2006 658-2456
Fax: +86-535-658-2330
Zip:264001
Email: wanglining@dongfang-china.com, shizhigang@dongfang-china.com
Http://www.dongfang-china.com

sun mastermind&design

Head Office

